Installation and service instructions

for contractors

Vitodens 100-W
Type B1HF, B1KF, 3.2 to 32 kW
Type B1HF-M, B1KF-M (for multiple connection), 5.7 to 32 kW
Wall mounted gas condensing boiler
Natural gas and LPG version

Gas Council No.
- B1HF: 41-819-51, 41-819-48, 41-819-49, 41-819-50
- B1KF: 47-819-50, 47-819-51, 47-819-52

VITODENS 100-W

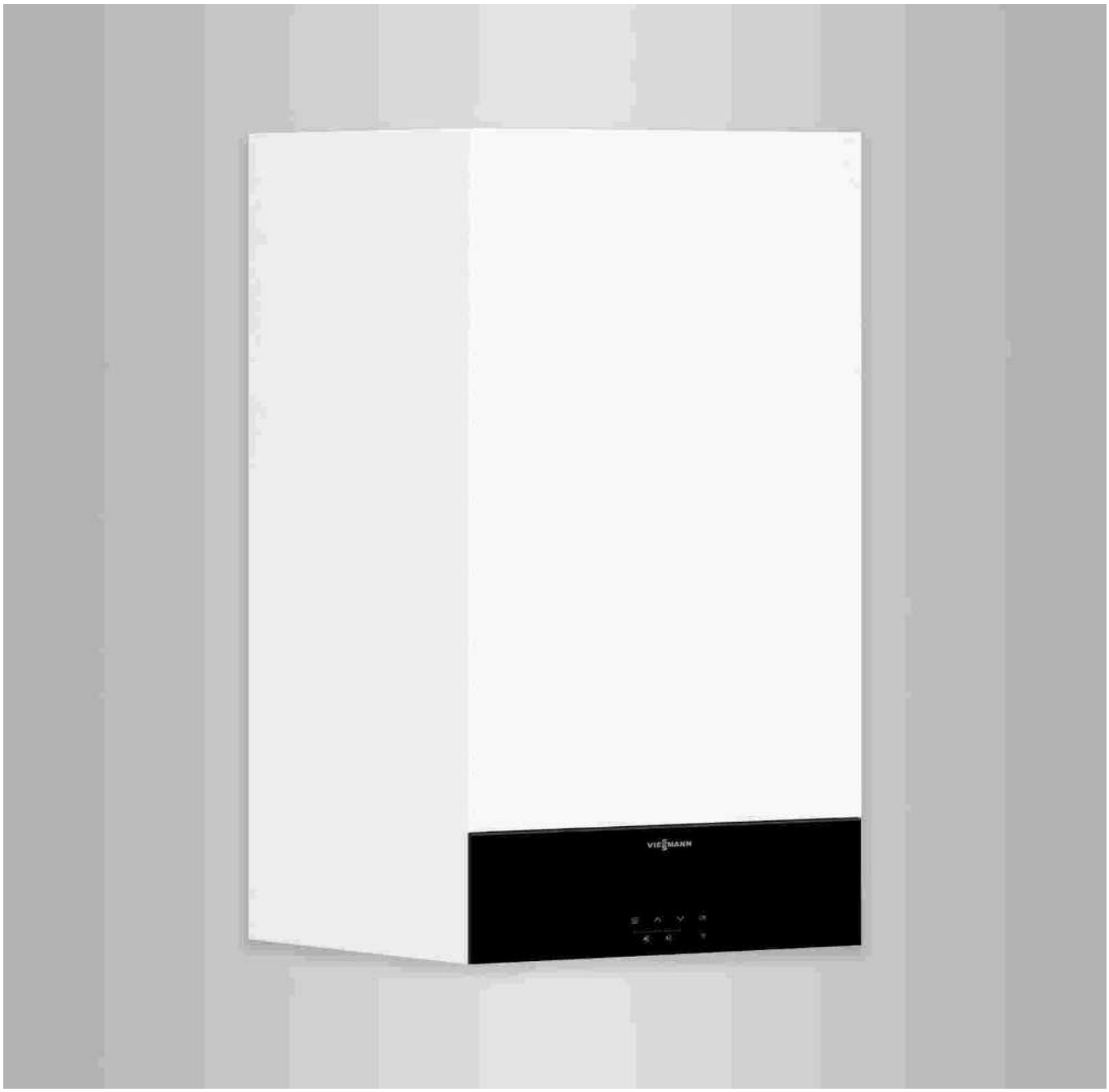

6167586 GB 3/2023

Please keep safe.

Safety instructions

⚠ Please follow these safety instructions closely to prevent accidents and material losses.

Safety instructions explained

⚠ **Danger**
This symbol warns against the risk of injury.

! **Please note**
This symbol warns against the risk of material losses and environmental pollution.

Note
Details identified by the word "Note" contain additional information.

Target group

These instructions are exclusively intended for qualified contractors.

- Work on gas installations may only be carried out by a registered gas fitter.
- Work on electrical equipment may only be carried out by a qualified electrician.
- The system must be commissioned by the system installer or a qualified person authorised by the installer.

Regulations to be observed

- National installation regulations
- Statutory regulations for the prevention of accidents
- Statutory regulations for environmental protection
- Codes of practice of the relevant trade associations
- Relevant country-specific safety regulations

Safety instructions for working on the system

Working on the system

- Where gas is used as the fuel, close the main gas shut-off valve and safeguard it against unintentional reopening.
- Isolate the system from the power supply, e.g. by removing the separate fuse or by means of a mains isolator, and check that it is no longer live.
- Safeguard the system against reconnection.
- Wear suitable personal protective equipment when carrying out any work.

6167586

Safety instructions (cont.)

⚠ **Danger**
Hot surfaces and fluids can lead to burns or scalding.
- Before maintenance and service work, switch OFF the appliance and let it cool down.
- Never touch hot surfaces on the boiler, burner, flue system or pipework.

! **Please note**
Electronic assemblies can be damaged by electrostatic discharge. Prior to commencing work, touch earthed objects such as heating or water pipes to discharge static loads.

Repair work

! **Please note**
Repairing components that fulfil a safety function can compromise the safe operation of the system. Replace faulty components only with genuine Viessmann spare parts.

Auxiliary components, spare and wearing parts

! **Please note**
Spare and wearing parts that have not been tested together with the system can compromise its function. Installing non-authorised components and making non-approved modifications or conversions can compromise safety and may invalidate our warranty.
For replacements, use only original spare parts supplied or approved by Viessmann.

Safety instructions (cont.)

Safety instructions for operating the system

If you smell gas

⚠ **Danger**
Escaping gas can lead to explosions which may result in serious injury.
- Do not smoke. Prevent naked flames and sparks. Never switch lights or electrical appliances on or off.
- Close the gas shut-off valve.
- Open windows and doors.
- Evacuate any people from the danger zone.
- Notify your gas or electricity supply utility from outside the building.
- Have the power supply to the building shut off from a safe place (outside the building).

If you smell flue gas

⚠ **Danger**
Flue gas can lead to life threatening poisoning.
- Shut down the heating system.
- Ventilate the installation site.
- Close doors to living spaces to prevent flue gases from spreading.

What to do if water escapes from the appliance

⚠ **Danger**
If water escapes from the appliance there is a risk of electrocution.
Switch OFF the heating system at the external isolator (e.g. fuse box, domestic distribution board).

⚠ **Danger**
If water escapes from the appliance there is a risk of scalding.
Never touch hot heating water.

Condensate

⚠ **Danger**
Contact with condensate can be harmful to health.
Never let condensate touch your skin or eyes and do not swallow it.

Flue systems and combustion air

Ensure that flue systems are clear and cannot be sealed, for instance due to accumulation of condensate or other external causes.
Ensure an adequate supply of combustion air.
Inform system users that subsequent modifications to the building characteristics are not permissible (e.g. cable/pipework routing, cladding or partitions).

⚠ **Danger**
Leaking or blocked flue systems, or an inadequate supply of combustion air can cause life threatening poisoning from carbon monoxide in the flue gas.
Ensure the flue system is in good working order. Vents for supplying combustion air must be non-sealable.

Extractors

Operating appliances that extract air to the outside (extractor hoods, extractors, air conditioning units, central vacuum cleaning systems, etc.) can create negative pressure. If the boiler is operated at the same time, this can lead to a reverse flow of flue gas.

Safety instructions (cont.)

⚠ **Danger**
The simultaneous operation of the boiler and appliances that exhausts air to the outside can result in life threatening poisoning due to a reverse flow of flue gas.
Fit an interlock circuit or take suitable steps to ensure an adequate supply of combustion air.

Index

1. Information

Disposal of packaging 8
Gas Council No. 8
Symbols 8
Intended use 9
Product information 9
■ Vitodens 100-W, type B1HF, B1KF 9
System examples 10
Maintenance parts and spare parts 10
■ Viessmann Partnershop 10
■ Viessmann spare part app 10

2. Preparing for installation 11

3. Installation sequence

Removing the boiler from the packaging 14
Mounting the boiler and making connections 15
■ Removing the front panel 15
■ Mounting the boiler on the pre-plumbing jig or mounting frame 15
■ Fitting the boiler to the wall mounting bracket 17
■ Connecting on the heating water and DHW sides 19
Connecting the condensate drain 20
■ Filling the trap with water 20
Connecting the balanced flue pipe 21
Connecting the gas line 22
■ Gas installation to BS 6891:2005 22
Electrical connections 23
■ Opening the wiring chamber 23
■ Layout of the electrical connections 24
■ On-site connections on the HBMU heat management unit 25
■ Connecting the outside temperature sensor 25
■ Connecting low loss header sensor 9 25
■ Connecting the cylinder temperature sensor 25
■ Connecting the DHW circulation pump (only type B1HF) 25
■ Connecting the floating switching contact 26
■ Power supply 40 27
■ Routing connecting cables/leads 28
WiFi operational reliability and system requirements 28
■ Wireless signal range of WiFi connection 29
■ Angle of penetration 29
Closing the wiring chamber 30
Fitting the front panel 30

4. Commissioning, inspection, maintenance

Steps - commissioning, inspection and maintenance 31

5. System configuration (parameters)

Calling up parameters 58
Parameter 58
■ Further settings 61
Subscriber numbers of connected extensions 62

6. Diagnosis and service checks

Service menu 64
■ Calling up the service menu 64
■ Exiting the service menu 64
Diagnosis 65
■ Checking operating data 65
■ Calling up operating data 65
■ b.7: Configuring the maintenance interval 65
■ b.8: Resetting the maintenance interval 65

7. Troubleshooting

Fault display on the programming unit 66
Overview of electronics modules 67

6167586

Index (cont.)

Resetting the burner 67
Fault messages 68
Repairs 90
- Shutting down the boiler 90
- Removing the boiler from the pre-plumbing jig or mounting frame 91
- Status/checking/diagnosing the internal circulation pump 91
- Checking the temperature sensors 93
- Replacing the HBMU heat management unit 97
- Replacing the power cable 97
- Replacing the HMI connecting cable 97
- Checking the plate heat exchanger 97
- Removing the hydraulic unit 98
- Checking the fuse 100

8. Function description

Appliance functions 101
- Heating mode 101
- Venting program 101
- Filling program 101
- Heating curve 101
- Screed drying 103

DHW heating (system boilers only) 105
External heating circuit hook-up (if installed) 105

9. Connection and wiring diagram

HBMU heat management unit 106

10. Commissioning/service reports

..... 110

11. Specification

Specification 111
- Gas condensing system boiler 111
- Gas condensing combi boiler 115

Electronic combustion control unit 121

12. Disposal

Final decommissioning and disposal 122

13. Ordering individual parts

Ordering individual parts for accessories 123

14. Certificates

Declaration of conformity 124
Manufacturer's certificate according to the 1st BImSchV [Germany] 124

15. Keyword index

..... 125

6 167586

Disposal of packaging

Please dispose of packaging waste in line with statutory regulations.

Gas Council No.

Type	Gas Council No.:
Vitodens 100-W, B1HF, 11 kW	**41-819-51**
Vitodens 100-W, B1HF, 19 kW	**41-819-48**
Vitodens 100-W, B1HF, 25 kW	**41-819-49**
Vitodens 100-W, B1HF, 32 kW	**41-819-50**
Vitodens 100-W, B1KF, 26 kW Combi	**47-819-50**
Vitodens 100-W, B1KF, 30 kW Combi	**47-819-51**
Vitodens 100-W, B1KF, 35 kW Combi	**47-819-52**

Symbols

Symbol	Meaning
	Reference to other document containing further information
1.	Step in a diagram: The numbers correspond to the order in which the steps are carried out.
!	Warning of material losses and environmental pollution
	Live electrical area
	Pay particular attention.
	▪ Component must audibly click into place. or ▪ Acoustic signal
	▪ Fit new component. or ▪ In conjunction with a tool: Clean the surface.
	Dispose of component correctly.
	Dispose of component at a suitable collection point. Do **not** dispose of component in domestic waste.

The steps in connection with commissioning, inspection and maintenance are found in the "Commissioning, inspection and maintenance" section and identified as follows:

Symbol	Meaning
	Steps required during commissioning
	Not required during commissioning
	Steps required during inspection
	Not required during inspection
	Steps required during maintenance
	Not required during maintenance

6167586

Intended use

The appliance is intended solely for installation and operation in sealed unvented heating systems that comply with EN 12828, with due attention paid to CECS215-2017 and the associated installation, service and operating instructions. It is only designed for heating up heating water that is of potable water quality.

Intended use presupposes that a fixed installation in conjunction with permissible, system-specific components has been carried out.

Commercial or industrial usage for a purpose other than heating the building or DHW shall be deemed inappropriate.

Any usage beyond this must be approved by the manufacturer in each individual case.

Incorrect usage or operation of the appliance (e.g. the appliance being opened by the system user) is prohibited and will result in an exclusion of liability. Incorrect usage also occurs if the components in the heating system are modified from their intended use (e.g. if the flue gas and ventilation air paths are sealed).

Product information

Vitodens 100-W, type B1HF, B1KF

Wall mounted gas condensing boiler with Inox-Radial heat exchanger and the following integrated components:

- Modulating MatriX-Plus burner for natural gas and LPG
- Hydraulics with 3-way diverter valve and variable speed high efficiency circulation pump
- Type B1KF: Plate heat exchanger for DHW heating
- Weather-compensated or constant temperature control unit
- Internal diaphragm expansion vessel:(8 l capacity)

The selected gas category in the delivered condition and the associated nominal gas pressure are given on the boiler type plate. The type plate also shows the other gas types and pressures with which the boiler can be operated. A conversion within the stated natural gas groups is not required. For conversion to LPG (without conversion kit), see "Commissioning, inspection and maintenance".

Type plate

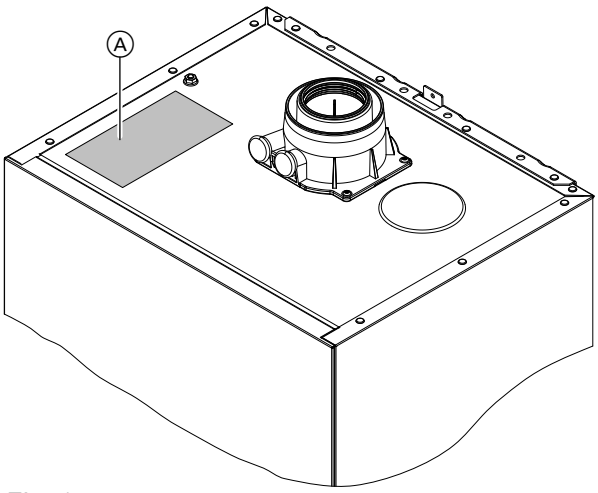

Fig. 1

Ⓐ Type plate with QR code for appliance registration

The type plate of the heat generator contains extensive product information and an appliance-specific **QR code with the marking "i"** for direct access to product-specific information and product registration on the internet.
The QR code contains the credentials for the registration and product information portal, and the 16-digit serial number.

Note
A further label with the QR code is enclosed with the heat generator.
Stick the label in the installation and service instructions so it can be easily found again for later use.

Product information (cont.)

The Vitodens 100-W may only be delivered to countries listed on the type plate. For deliveries to other countries, approved contractors must arrange individual approval on their own initiative and in accordance with the law of the country in question.

System examples

System examples with hydraulic and electrical connection diagrams and function descriptions are available to help setting up the heating system.

Detailed information regarding system examples:
www.viessmann-schemes.com

Maintenance parts and spare parts

Maintenance parts and spare parts can be identified and ordered directly online.

Viessmann Partnershop

Login:
https://shop.viessmann.com/

Viessmann spare part app

www.viessmann.com/etapp

Download on the App Store

GET IT ON Google Play

6167586

Preparing for installation

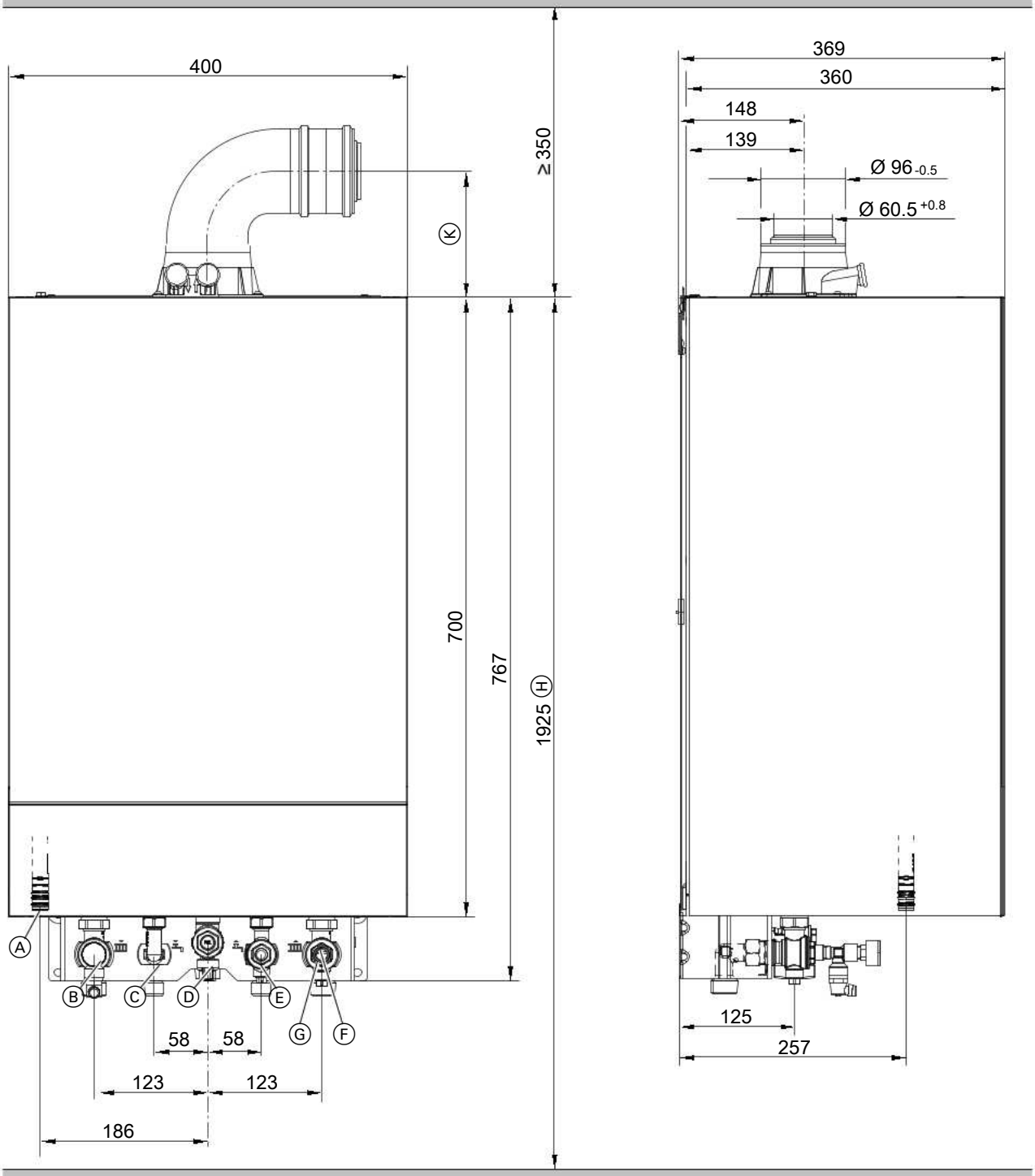

Fig. 2 Illustration shows a gas condensing combi boiler

Ⓐ Condensate drain
Ⓑ Heating flow
Ⓒ DHW (gas condensing combi boiler)
Cylinder flow (gas condensing system boiler)
Ⓓ Gas connection
Ⓔ Cold water (gas condensing combi boiler)
Cylinder return (gas condensing system boiler)
Ⓕ Heating return
Ⓖ Filling/draining

6167586

Preparing for installation (cont.)

Ⓗ Dimension for siting with DHW cylinder below the boiler
Ⓚ Dimension: 161 mm – for external wall connection, Order nos. 7441467, 7411961
Dimension: 131 mm – for external wall connection, Order no. 7946886 (with reduced flue bend)

Note
The boiler (IP rating IP X4) is approved for installation in wet rooms in safety zone 1. Exposure to jets of water must be prevented.
For open flue operation, the boiler may only be operated with a splash cover.

1. Subject to order: Fit supplied pre-plumbing jig, mounting frame or wall mounting bracket in the relevant installation location.

   Installation instructions for pre-plumbing jig or mounting frame

   Note
   Check the condition of the wall where the boiler is to be installed. For the suitability of the supplied rawl plugs for various building materials, see manufacturer's instructions: Fischer Spreizdübel SX 10 x 80
   For other construction materials, use fixing materials with sufficient load bearing capacity.

2. Prepare the water connections to the valves/fittings of the mounting bracket.
   Thoroughly flush the heating system.

   ! **Please note**
   To prevent damage to the appliance, connect all pipework so that it is free of load and torque stress.

   Note
   If an on-site expansion vessel also has to be installed: Install this expansion vessel in the cylinder return, as the 3-way diverter valve is located in the heating flow.
   Not possible with type B1KF

   Note
   An additional ball valve can be fitted in the DHW pipe when installing a combi boiler in a basement to facilitate maintenance work.

3. Prepare the gas connection according to TRGI or TRF [or local regulations].

4. Prepare the electrical connections.
   - The appliance is delivered fitted with a power cable (approx. 2 m long).
     Note
     Connect the power cable to the electricity supply using a fixed connection.
   - Power supply: 230 V, 50 Hz, fuse rating max. 16 A
   - Accessory cables: 0.75 mm^2 flexible PVC cable with required number of cores for external connections

6167586

Preparing for installation (cont.)

Connection on the DHW side for gas condensing combi boiler

Cold water installation

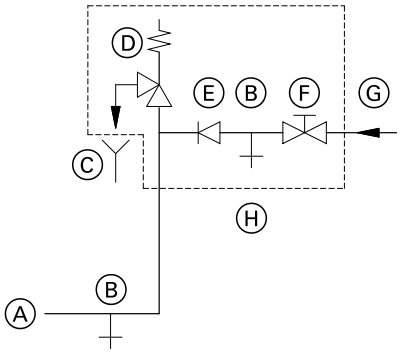

Fig. 3

Ⓐ Cold water connection of boiler
Ⓑ Drain outlet
Ⓒ Visible discharge pipe outlet point
Ⓓ Safety valve
Ⓔ Non-return valve
Ⓕ Shut-off valve
Ⓖ Cold water
Ⓗ Safety assembly

Safety assembly Ⓗ is included in the standard delivery and requires installing.
Only use a non-return valve or a combined shut-off and non-return valve in conjunction with a safety valve. If the safety valve is used, the cold water shut-off valve on the boiler must not be shut off.
Remove the toggle on the cold water shut-off valve (if installed) to prevent it being shut off manually.

Removing the boiler from the packaging

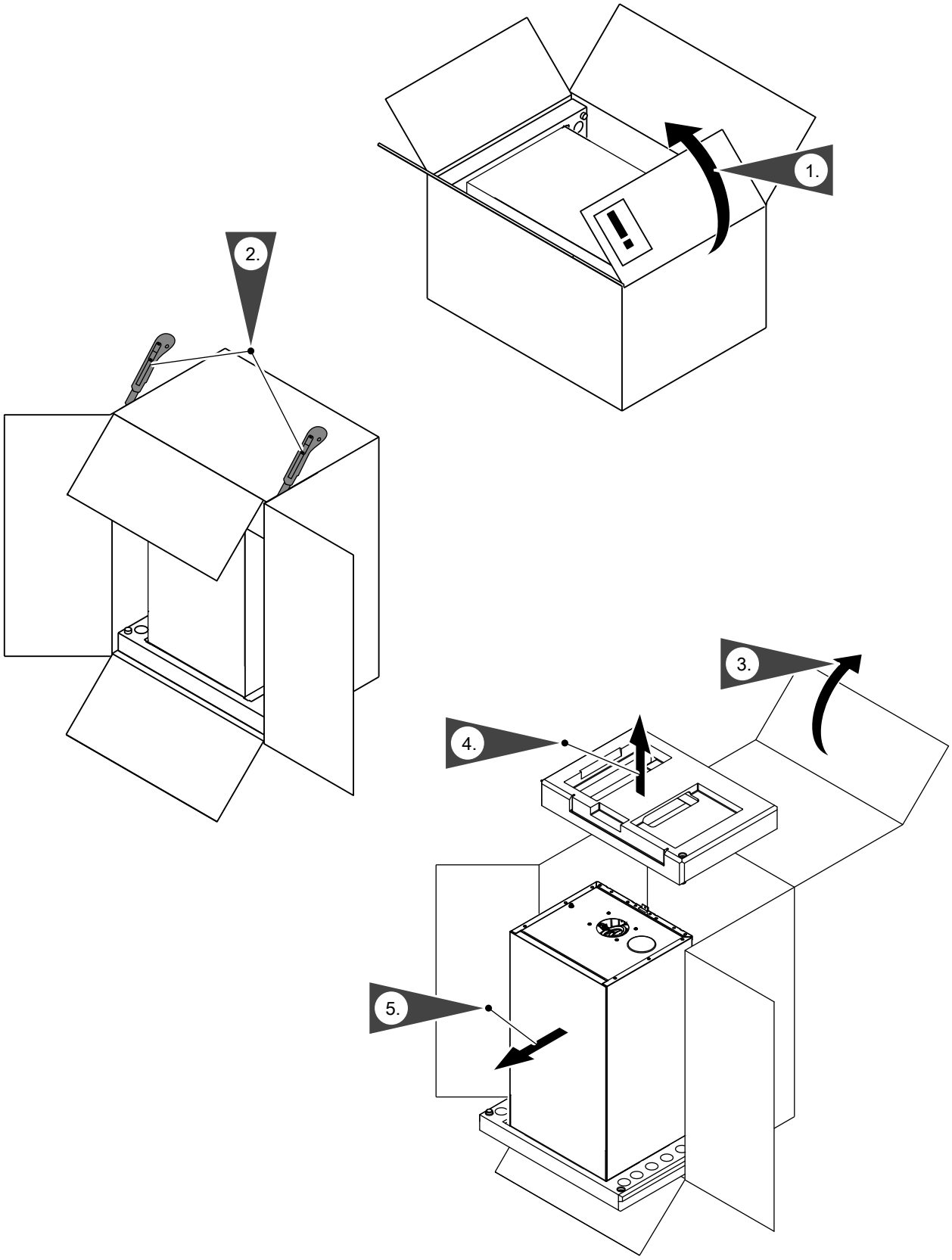

Fig. 4

6167586

Mounting the boiler and making connections

Removing the front panel

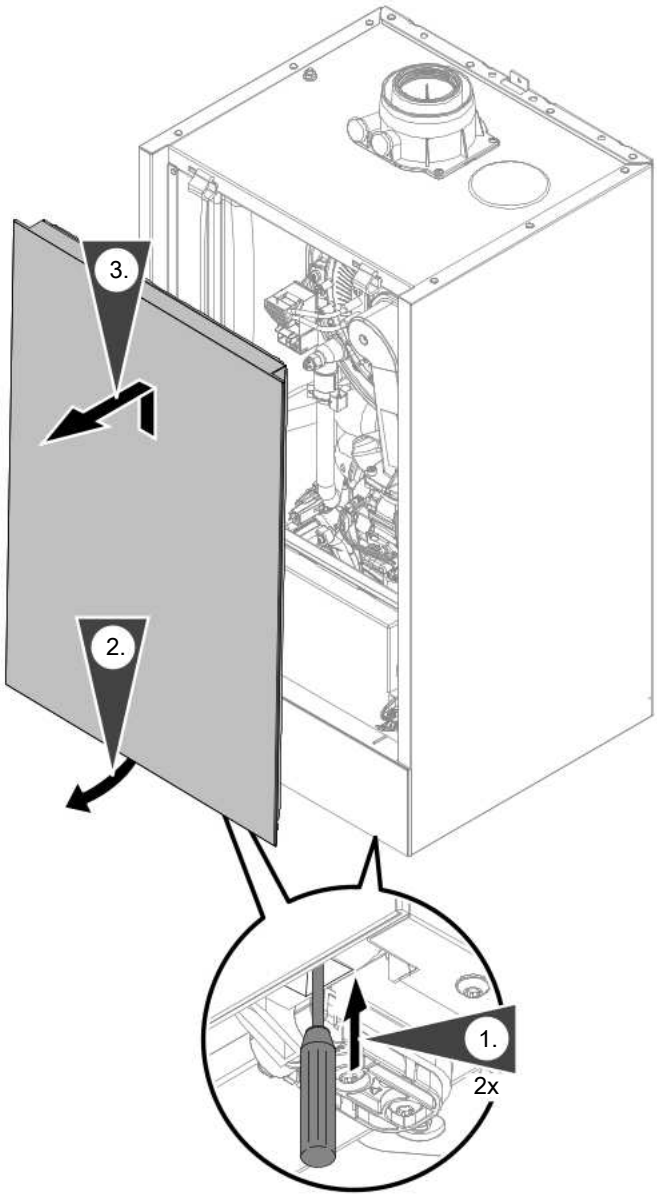

Fig. 5

1. Unlock the front panel on the underside (push in), using a screwdriver or similar tool.
2. Swivel the front panel forwards slightly and lift away upwards.

Mounting the boiler on the pre-plumbing jig or mounting frame

Note
Various installation components can be found in a separate pack. Keep the installation components safe, as they will be required for later installation.

Mounting the boiler and making connections (cont.)

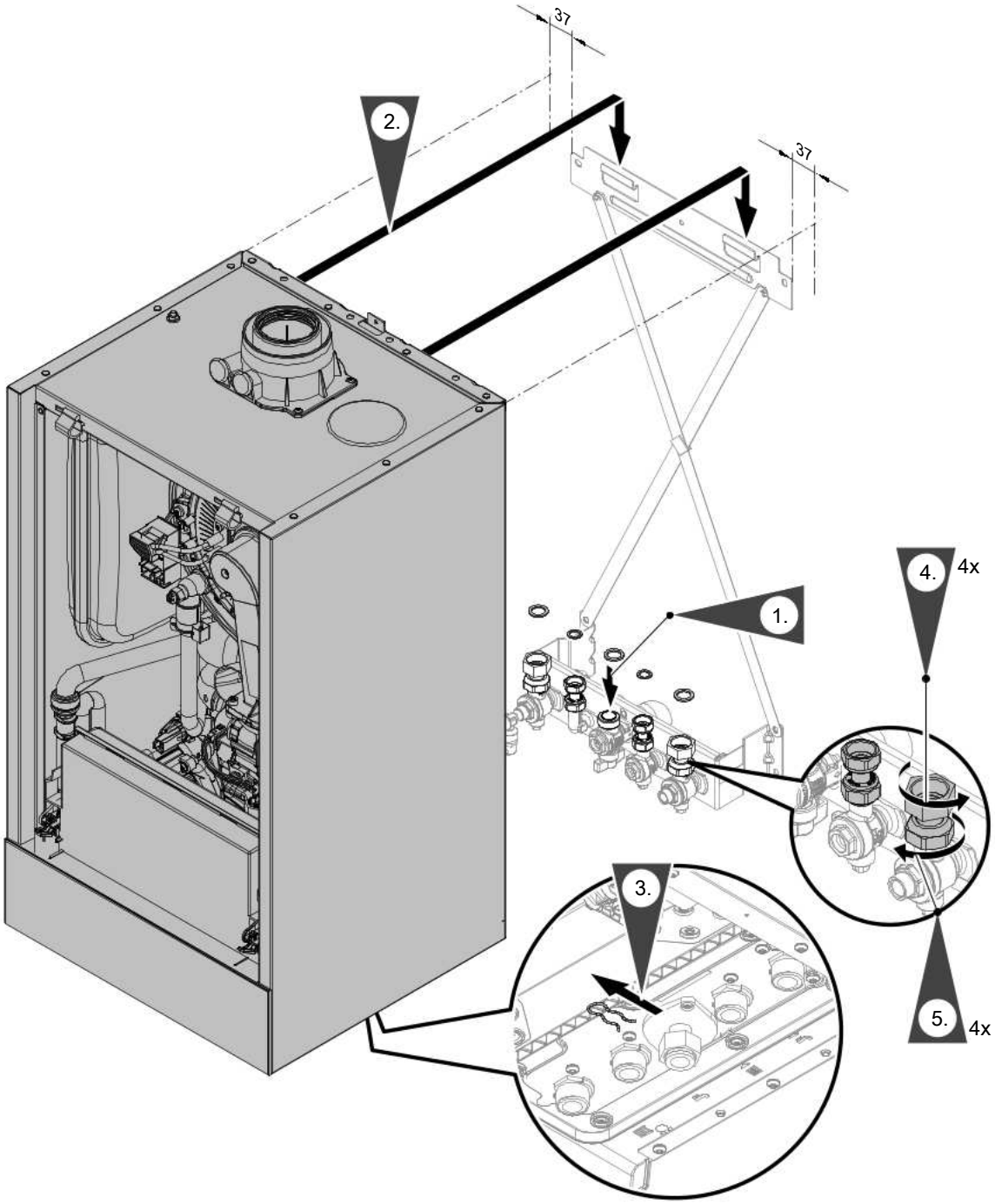

Fig. 6

Note
The diagram shows installation on a pre-plumbing jig for a gas condensing combi boiler.

The boiler can be installed on the following accessories:
- *Pre-plumbing jig*
- *Mounting frame*
- *Plumbing wall mounting frame*

1. Replace gaskets.

Internal gasket diameter:
- Gas connection Ø 18.5 mm
- Connections on the heating water side Ø 17.0 mm

Note
Gasket for gas connection is attached to the gas shut-off valve.

6167586

Mounting the boiler and making connections (cont.)

2. Suspend the Vitodens from the wall mounting bracket.

   Note
   After mounting, ensure correct seating.

3. ***Note***
   Only remove the locking clip under the gas pipe union nut once the appliance has been installed. Locking clip is no longer required.

4. Tighten union nuts so that they form a tight seal. Tighten the union nuts as tightly as necessary and ensure that the components are undamaged and are functioning correctly throughout service life. Observe torque settings if a torque wrench is available.
   Check for gas tightness to BSI 6891.

   Torque settings:
   - Union nuts G ¾: 30 Nm
   - Union nuts G ½: 24 Nm

   When carrying out any work on gas connection fittings, hold with a suitable tool. Never transfer any forces to the internal components.

5. Tighten locking ring fittings so that they form a tight seal:
   1 turn beyond finger-tight

Fitting the boiler to the wall mounting bracket

Note
Various installation components can be found in a separate pack. Keep the installation components safe, as they will be required for later installation.

Mounting the boiler and making connections (cont.)

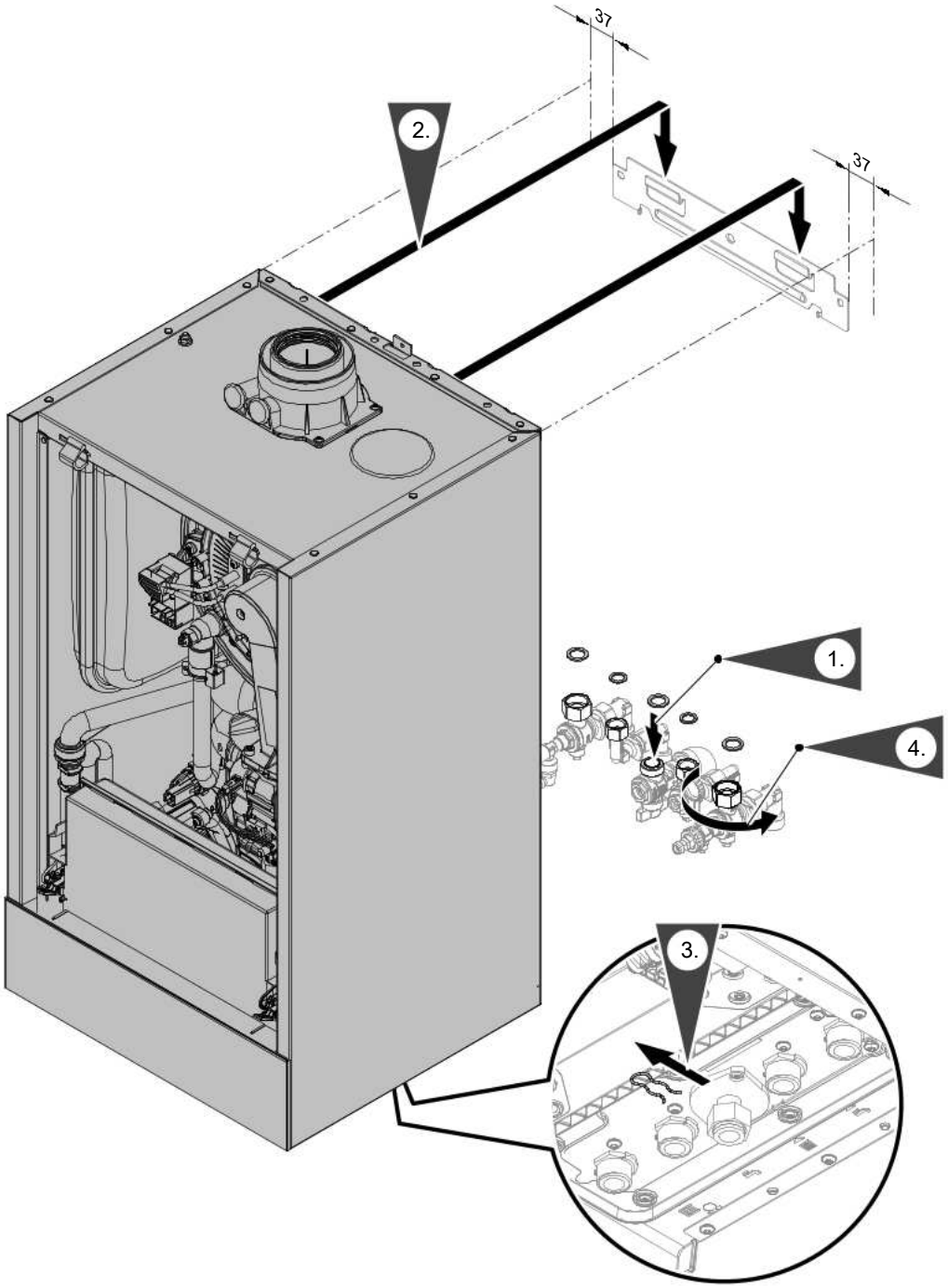

Fig. 7

1. Replace gaskets. Fit valves and gas shut-off valve.

Internal gasket diameter:
- Gas connection Ø 18.5 mm
- Connections on the heating water side Ø 17.0 mm

Note
Gasket for gas connection is attached to the gas shut-off valve.

2. Suspend the Vitodens from the wall mounting bracket.

3. ***Note***
Only remove the locking clip under the gas pipe union nut once the appliance has been installed. Locking clip is no longer required.

6167586

Mounting the boiler and making connections (cont.)

4. Tighten union nuts so that they form a tight seal. Tighten the union nuts as tightly as necessary and ensure that the components are undamaged and are functioning correctly throughout service life. Observe torque settings if a torque wrench is available.
   Check for gas tightness to BSI 6891.

   Torque settings:
   - Union nuts G ¾: 30 Nm
   - Union nuts G ½: 24 Nm

   When carrying out any work on gas connection fittings, hold with a suitable tool. Never transfer any forces to the internal components.

Connecting on the heating water and DHW sides

If the connections have not been fitted previously, make the connections on the heating water and DHW sides.

Gas condensing system boiler

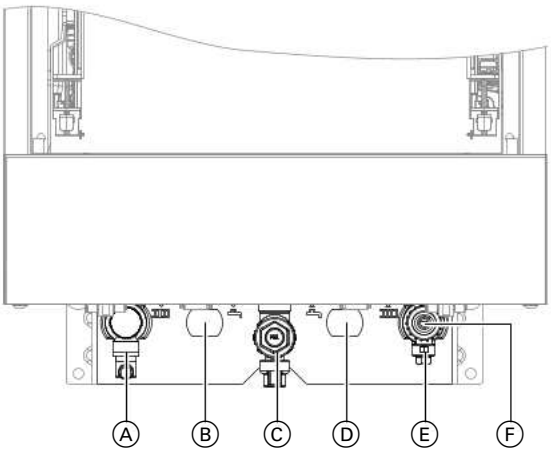

Fig. 8 Specifications for threads in conjunction with connection accessories

Ⓐ Heating flow **R ¾ (male thread)**
Ⓑ Cylinder flow **G ¾ (male thread)**
Ⓒ Gas connection **R ¾ (male thread)**
Ⓓ Cylinder return **G ¾ (male thread)**
Ⓔ Heating return **R ¾ (male thread)**
Ⓕ Filling/draining

Connection on the heating water side of the DHW cylinder:
The required intermediate pieces (Rp ¾, female thread) on the cylinder flow and return are part of the connection set for the DHW cylinder.
If no DHW cylinder is being connected, seal off the connections with caps.

Gas condensing combi boiler

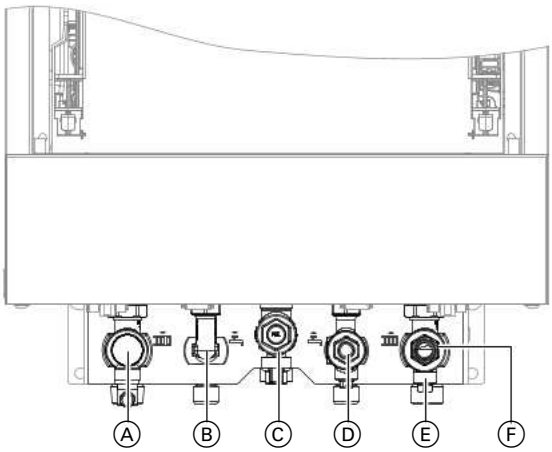

Fig. 9 Specifications for threads in conjunction with connection accessories

Ⓐ Heating flow **R ¾ (male thread)**
Ⓑ DHW **R ½ (male thread)**
Ⓒ Gas connection **R ¾ (male thread)**
Ⓓ Cold water **R ½ (male thread)**
Ⓔ Heating return **R ¾ (male thread)**
Ⓕ Filling/draining

Scald protection

DHW temperatures of over 60 °C can occur with gas condensing combi boilers. As a result, scald protection should be installed on site in the DHW pipe.

Connecting the condensate drain

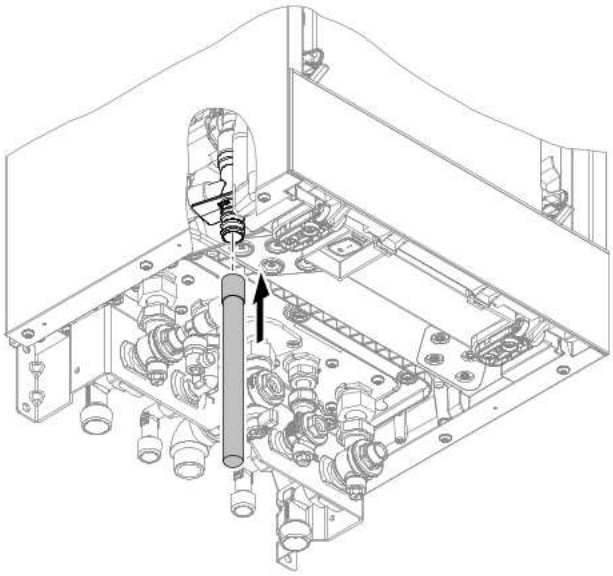

Fig. 10

1. Push the supplied drain hose on to the drain connector.
   Drain hose: Ø 19 x 800 mm

2. Connect the drain hose with a constant fall and a pipe vent to the drain network or a neutralising system.

   Note
   Route the onward drain line inside the building as far as possible.

   If the onward drain line is routed outside the building:
   - *Use a min. Ø 30 mm line.*
   - *Protect the line from frost.*
   - *Keep the line as short as possible.*

   ! **Please note**
   The drain hose is used to route away any hot water discharged from the safety valve. Lay and secure the drain hose in a way that prevents any risk of scalding.

   Note
   Observe local waste water regulations.

Filling the trap with water

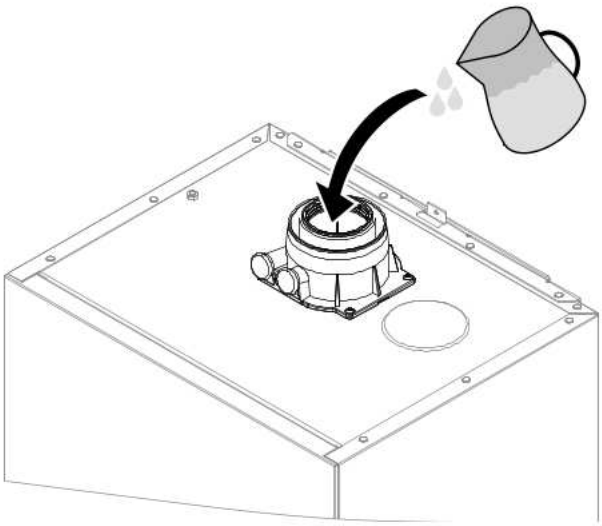

Fig. 11

Note
If there is a risk of frost, only fill the trap just before commissioning.

Pour at least 0.3 l of water into the flue gas connection.

! **Please note**
During commissioning, flue gas may escape from the condensate drain.
Always fill the trap with water before commissioning.

Connecting the balanced flue pipe

Note
The labels "System certificate" and "Skoberne GmbH or Groppalli flue system" enclosed with the technical documentation may only be used in conjunction with the Viessmann flue system made by Skoberne or Groppalli.

Connecting the balanced flue pipe
Flue system installation instructions

Connecting several Vitodens to a shared flue system

If several Vitodens are connected to a shared flue system at positive pressure using routing type C_{10}, C_{11}, C_{13} or C_{14}:
For each boiler, install one back draught safety device (accessories) in the flue gas connection and one in the mixing shaft of the burner.

Note
Not all appliance types are approved for "multiple connection".
Please order Vitodens appliances that are suitable for this; see pricelist.

Note
In appliances for "multiple connection", a special back draught safety device is installed in the mixing shaft of the burner, downstream of the fan.
A further back draught safety device is installed in the flue system.

Installing the back draught safety devices:

Installation instructions for back draught safety device

Do not carry out **commissioning** until the following conditions are met:
- Free passage through the flue gas pipes.
- Flue system with positive pressure is gas-tight.
- Inspection port covers checked for secure and tight seating.
- Apertures for ensuring sufficient combustion air supply are open and cannot be closed off.
  Note
  In open flue operation, install a rodent guard grille on the supply air aperture.
- Applicable regulations on installing and commissioning flue systems have been followed.
- Visual inspection of the flue gas connection.
  Note
  The use of lubricant prevents the gasket from shifting when the flue pipe is installed.
  When using a straight flue pipe, check that the inner ventilation air pipe is correctly fitted.

Danger
Leaking or blocked flue systems or an insufficient supply of combustion air cause life threatening poisoning due to carbon monoxide in the flue gas.
Ensure the flue system is in good working order.
Vents for interconnected combustion air supply must be non-closable in open flue operation.
Prevent condensate drainage via a wind protector.

Connecting the gas line

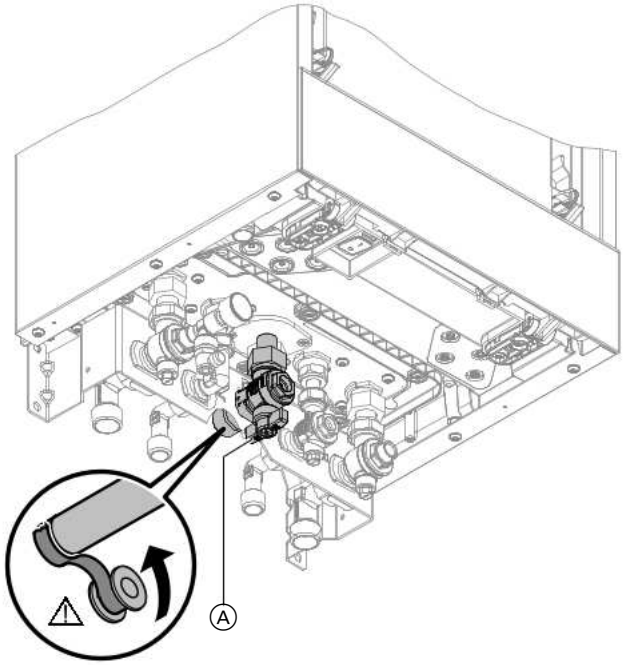

Fig. 12

1. If the gas connection has not been fitted previously, seal gas shut-off valve Ⓐ to the gas connection.
   When carrying out any work on gas connection fittings, counterhold with a suitable tool. Never transfer any forces to the internal components.

   Information on operation with LPG
   Install an external safety solenoid valve if the boiler is installed below ground level.
   An EM-EA1 extension (accessories) is required to connect the safety solenoid valve.

2. Check for leaks.

   ⚠ **Danger**
   Escaping gas leads to a risk of explosion.
   Check all connections on the gas side (also inside the appliance) for tightness.

   Note
   Only use suitable and approved leak detection agents (EN 14291) and devices for the tightness test. Leak detection agents with unsuitable constituents (e.g. nitrides, sulphides) can cause material damage.
   Remove residues of the leak detection agent after testing.

   ! **Please note**
   Excessive test pressure will damage the boiler and gas solenoid valve.
   Max. test pressure 150 mbar (15 kPa). If a higher pressure is required for leak tests, disconnect the boiler and the gas solenoid valve from the main supply pipe (undo the fitting).

3. Purge the gas line.

Gas installation to BS 6891:2005

It is the gas installer’s responsibility to size the gas installation lines in accordance with BS 6891:2005. If it is determined that the operating pressure falls below the minimum outlet level for the measuring device of 19 mbar: Check and ensure that the gas pressure is sufficient for correct and safe operation.

Taking into account a pressure drop from the installation lines of no more than 1 mbar, it can be assumed that a permissible minimum pressure of 18 mbar is present at the appliance's gas connection (reference BS 6400-1 Section 6.2, Pressure absorption).

Connecting the gas line (cont.)

The external gas tap may reduce operating pressure further if measured at its test point. The pressure drop is relative to the heat input of the boiler (kW).

Observe minimum gas pressure at the gas fitting in accordance with the table – see page 41

Electrical connections

Opening the wiring chamber

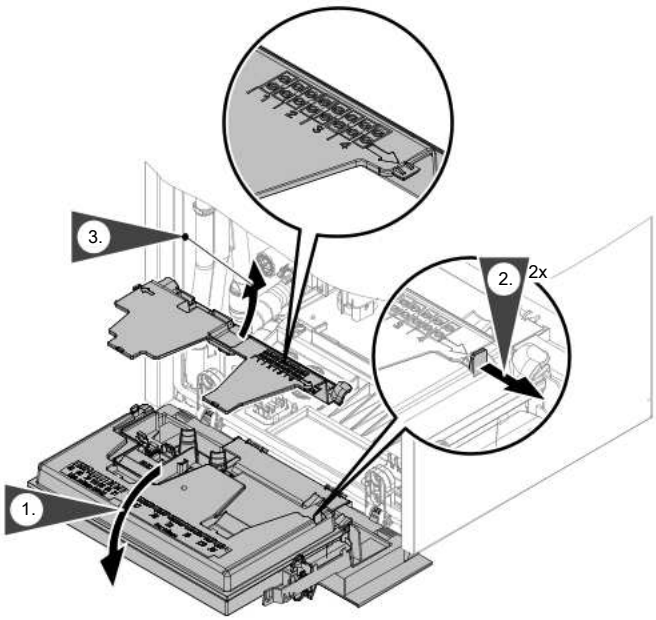

Fig. 13

! **Please note**
Electronic assemblies can be damaged by electrostatic discharge.
Before beginning work, touch an earthed object, e.g. a heating or water pipe, to discharge any static.

Electrical connections (cont.)

Layout of the electrical connections

Note
For further information on the connections, see the following chapters.

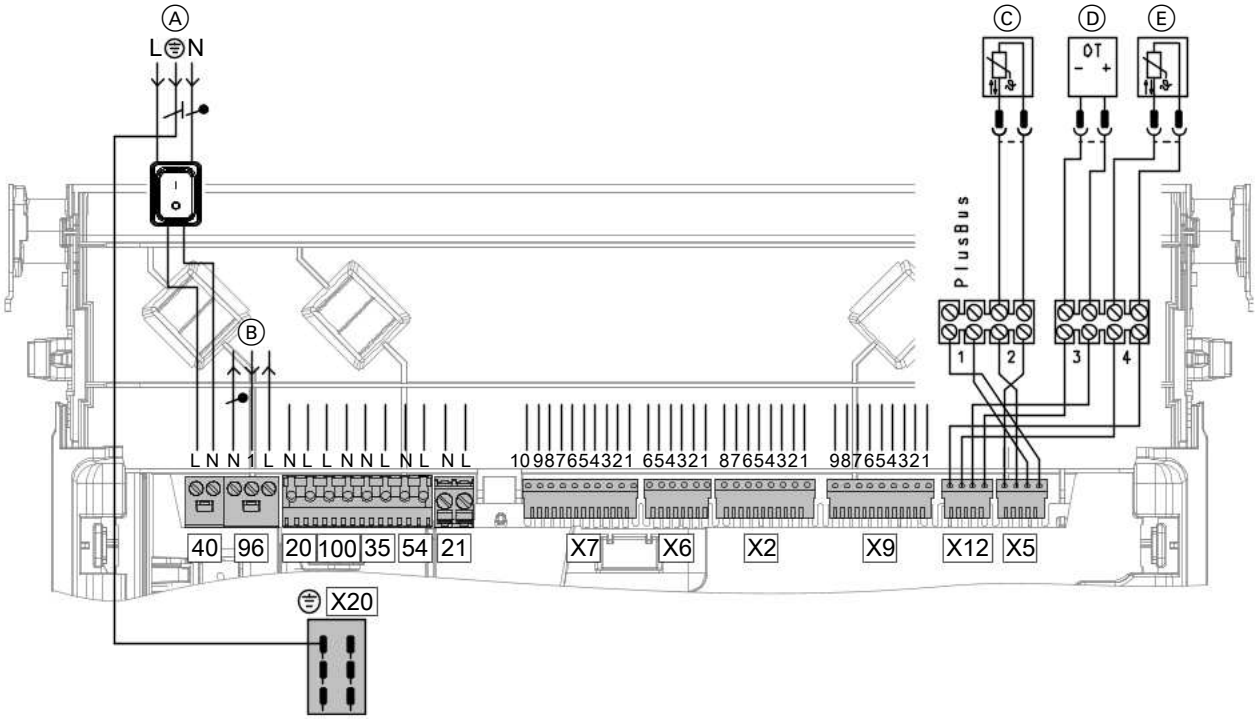

Fig. 14

Connections to 230 V~ plugs

- Ⓐ Power supply 40
- Ⓑ Configurable floating input 96, 230 V
  230 V output
  230 V room thermostat connection
- 20 Heating circuit pump
- 100 Fan motor
- 35 Gas solenoid valve
- 54 Ignition unit/ionisation
- 21 No function assigned
- Ⓒ Cylinder temperature sensor (system boiler)
- Ⓓ Remote control (OpenTherm device)
- Ⓔ Outside temperature sensor
- X20 Equipotential bonding (earth conductor)

Note on connecting accessories
When connecting accessories observe the separate installation instructions provided with them.

Electrical connections (cont.)

On-site connections on the HBMU heat management unit

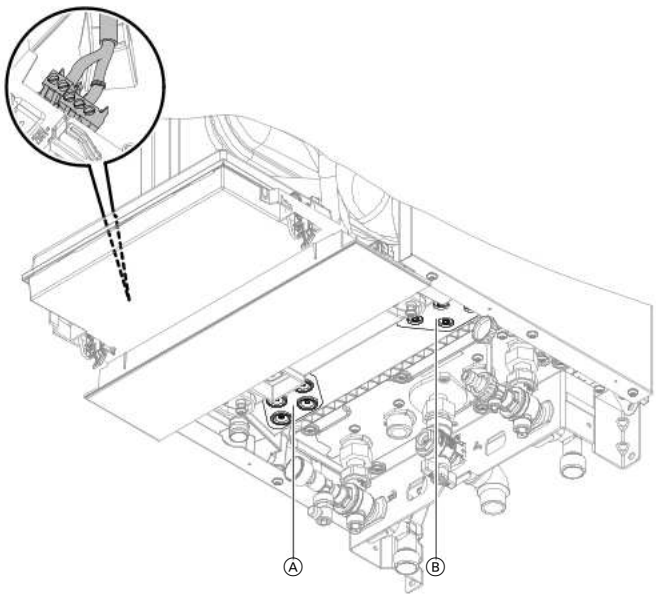

Fig. 15

Ⓐ Diaphragm grommets for 230 V cables
Ⓑ Diaphragm grommets, extra low voltage (ELV)

- Open diaphragm grommets as required. Thread through only one cable at a time without a plug. Ensure diaphragm grommets are airtight. If required, remove plug from cable. After threading the cable through, re-fit the plug to the wire ferrules.
- For cables without strain relief bushings, provide strain relief in the wiring chamber in the form of cable ties.

Connecting the outside temperature sensor

Fitting location for outside temperature sensor

- North or north-westerly wall, 2 to 2.5 m above ground level; in multi storey buildings, in the upper half of the second floor
- Not above windows, doors or vents
- Not immediately below balconies or gutters
- Never render over.

Outside temperature sensor connection

See page 24
2-core lead, length up to 35 m with a cross-section of 1.5 mm^2

Connecting low loss header sensor 9

The low loss header sensor is connected to accessory extension EM-P1 or EM-M1/MX (ADIO electronics module).

Installation instructions for extension EM-P1 or EM-M1/MX

Connecting the cylinder temperature sensor

Connect cylinder temperature sensor to terminals Ⓒ.
See page 24.

Connecting the DHW circulation pump (only type B1HF)

Note
Connect DHW circulation pumps to EM-P1 extension. Configuration via software tool.
Connect DHW circulation pumps with standalone functions directly to the 230 V ~ supply.

Specification

Rated current	1 A
Rated voltage	230 V ~

Electrical connections (cont.)

Connecting the floating switching contact

Connection at plug 96

One of the following functions can be connected:
- **"0"** No function or room thermostat
- **"2"** DHW circulation pump external demand (push-button function, pump runs for 5 min). Not for Vitodens 111-W
- **"4"** External demand
- **"5"** External blocking or alternatively connection for external heating circuit hook-up (if no more than one heating circuit hook-up is configured on commissioning. If more than one heating circuit hook-up is required, connect to EM-EA1 accessory.)

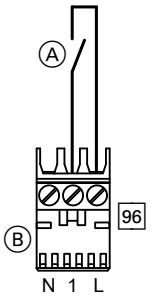

Fig. 16

Ⓐ Floating switching contact
Ⓑ Plug 96

Assigning functions in the commissioning assistant

See commissioning assistant in "Commissioning".

Notes on connecting PlusBus subscribers

As a maximum, the following PlusBus subscribers can be connected to the control unit (terminal 1):
- 1 EM-M1 or EM- MX extensions
- 1 Vitotrol 200-E
- 1 EM-EA1 extension
- 1 EM-S1 extension
- 1 EM-P1 extension

Note
The number of PlusBus subscribers is limited: Max. one Vitotrol 200-E plus a maximum of 3 additional extensions, e.g. EM-M1 or EM-EA1.
Example: 1 x Vitotrol 200-E + 1 x EM-M1 + 1 x EM-EA1
If no Vitotrol 200-E is connected, 4 extensions can be connected.

The max. total length of the PlusBus lead is 50 m. With an unscreened lead, 2-core, 0.34 mm^2.

Accessories mains connection, connect plug to external power supply

Connect one or more extensions via an ON/OFF switch directly to the mains supply (see next chapter).

Electrical connections (cont.)

Accessories with direct mains connection

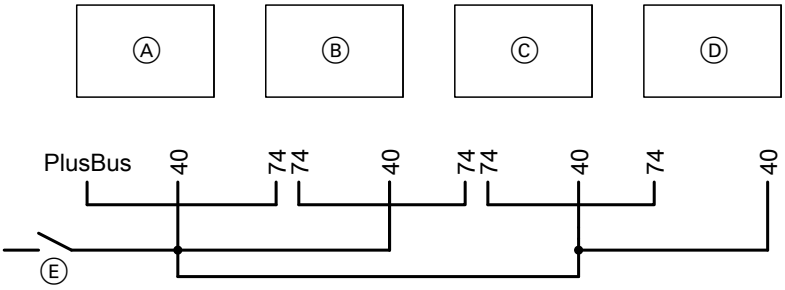

Fig. 17

Ⓐ HBMU heat management unit heat generator
Ⓑ Mixer extension kit
Ⓒ EM-EA1 extension and/or EM-S1 extension
Ⓓ EM-P1 extension
Ⓔ External ON/OFF switch
40 Mains input
74 PlusBus

Note
PlusBus system length max. 50 m for 0.34 mm² cable cross-section and unshielded cable.
If the current flowing to the connected working parts (e.g. circulation pumps) is higher than the fuse rating of the accessory: Only use the output concerned to control an on-site relay.

Note
Use addressing for S1 rotary selector. See also the information in chapter "Notes on connecting PlusBus subscribers".

Accessories	Internal fuse protection
EM-M1, EM-MX mixer extension kit	2 A
EM-EA1 extension	2 A
EM-S1 extension (not for Vitodens 111)	2 A

Danger
Incorrect wiring can lead to serious injury from electrical current and result in appliance damage.
- Route extra low voltage (ELV) leads < 42 V separately from cables > 42 V/230 V~.
- Strip as little of the insulation as possible, directly before the terminals, and bundle close to the corresponding terminals.
- Secure cables/leads with cable ties.

Power supply 40

Danger
Incorrectly executed electrical installations can result in injuries from electrical current and damage to the appliance.

Connect the power supply and implement all safety measures (e.g. RCD circuit) in accordance with the following regulations:
- IEC 60364-4-41
- IEEE Wiring Regulation; BS 7671:2018
- Connection conditions of the local grid operator

- Install an isolator in the power cable to provide omnipolar separation from the mains for all active conductors, corresponding to overvoltage category III (3 mm) for complete isolation. The isolator must be fitted in the permanent electrical installation, in line with installation requirements.
  We also recommend installing a pulse current-sensitive RCD (RCD class A).
- Connect the power cable to the electricity supply using a fixed connection.
- If the power supply to the appliance is connected with a flexible power cable, ensure that the live conductors are pulled taut before the earth conductor in the event of strain relief failure. The length of the earth conductor wire will depend on the design.
- Max. fuse rating 16 A.

Electrical connections (cont.)

Danger
The absence of system component earthing can lead to serious injury from electric current if an electrical fault occurs.
The appliance and pipework must be connected to the equipotential bonding of the building.

Routing connecting cables/leads

Please note
If closures or diaphragm grommets are damaged, splashproofing is no longer ensured.
Never open or damage closures or unused diaphragm grommets on the underside of the appliance. Seal cable entries with fitted diaphragm grommets.

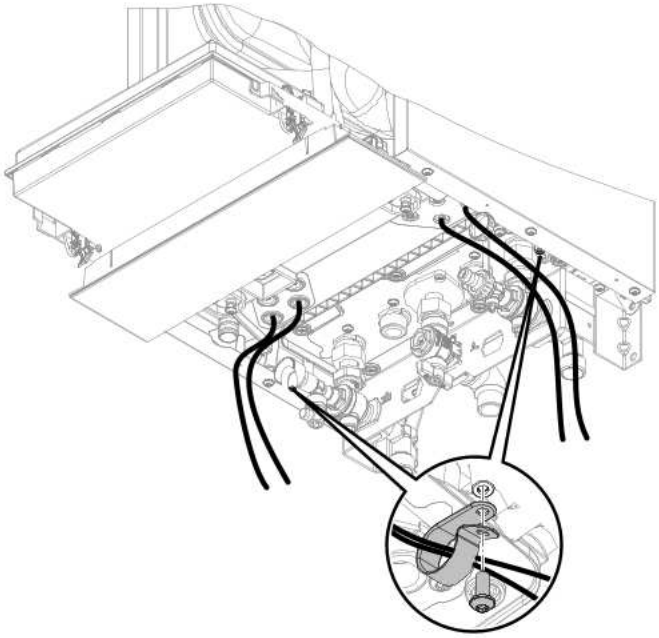

Fig. 18

Bundle cables using the supplied cable clips.
Route extra low voltage (ELV) leads < 42 V separately from cables > 42 V/230 V~.
Secure the cable clips on the underside using the supplied screws.
Do not route cables/leads over sharp edges and lying against the casing (sound transmission).

Please note
If connecting cables/leads come into contact with hot components, they will be damaged.
When routing and securing cables/leads on site, ensure that the maximum permissible temperatures for these cables/leads are not exceeded.

WiFi operational reliability and system requirements

WiFi router system requirement

- WiFi router with activated WiFi:
  The WiFi router must be protected by a sufficiently secure WPA2 password.
  The WiFi router must always have the latest firmware update.
  Do not use unencrypted connections between the heat generator and the WiFi router.
- Internet connection with high availability:
  Flat rate (flat rate tariff **without** restriction on time or data volume)
- Dynamic IP addressing (DHCP, delivered condition) in the network (WiFi):
  Have this checked on site by an IT expert **prior** to commissioning. Arrange for set up if required.
- Set routing and security parameters in the IP network (LAN).
  Enable the following ports for direct outgoing connections:
  - Port 80
  - Port 123
  - Port 443
  - Port 8883

  Have this checked on site by an IT expert **prior** to commissioning. Set up enabling if required.

WiFi operational reliability and system… (cont.)

Wireless signal range of WiFi connection

The range of wireless signals may be reduced by walls, ceilings and interior fixtures. These weaken the wireless signal, causing poor reception due to the following circumstances.

- On their way between transmitter and receiver, wireless signals are **damped**, e.g. by air or when penetrating walls.
- Wireless signals are **reflected** by metallic objects, e.g. reinforcements embedded in walls, metal foil of thermal insulation and thermal glazing with metallised thermal vapour deposit.
- Wireless signals are **isolated** by service ducts and lift shafts.
- Wireless signals are **disrupted** by devices that also operate with high frequency signals. Maintain a distance of **at least 2 m** from these devices:
  - Computers
  - Audio and video systems
  - Devices with active WiFi connection
  - Electronic transformers
  - Pre-ballasts

Install the heat generator as close as possible to the WiFi router to ensure a good WiFi connection. The signal strength can be displayed on the programming unit: See operating instructions.

Note
The WiFi signal strength can be increased with commercially available WiFi repeaters.

Angle of penetration

The reception quality remains best if radio signals hit the walls vertically.
Depending on the angle of penetration, the effective wall thickness changes and so does the extent to which the electromagnetic waves are damped.

Flat (unfavourable) angle of penetration

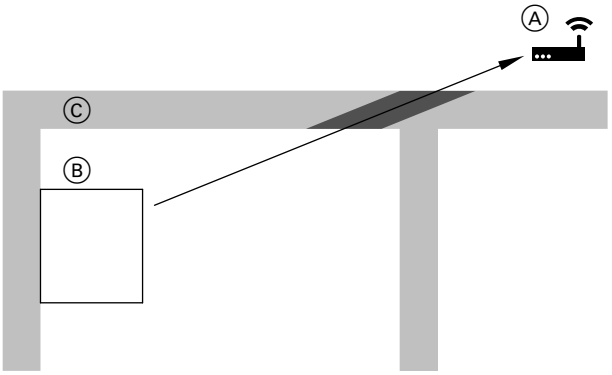

Fig. 19

Ⓐ WiFi router
Ⓑ Heat generator
Ⓒ Wall

Ideal angle of penetration

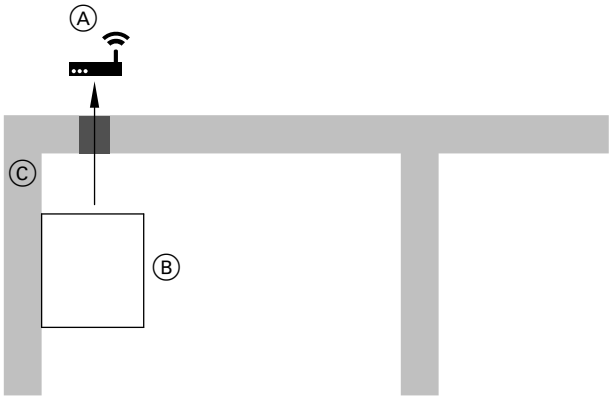

Fig. 20

Ⓐ WiFi router
Ⓑ Heat generator
Ⓒ Wall

Closing the wiring chamber

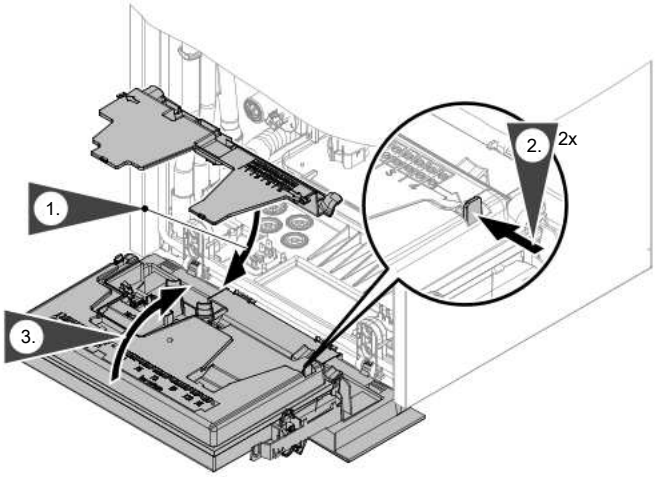

Fig. 21

Fitting the front panel

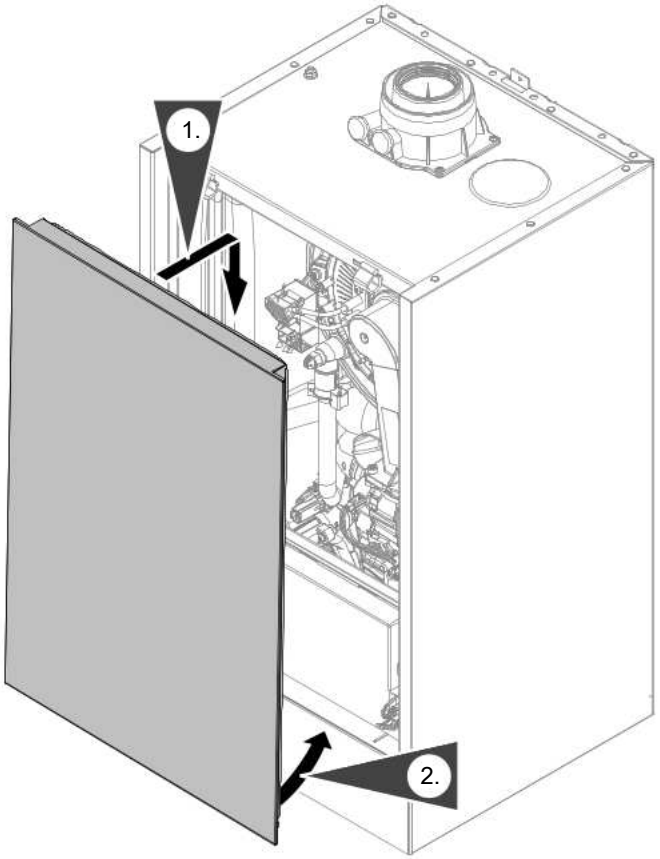

Fig. 22

Steps - commissioning, inspection and maintenance

Commissioning steps
Inspection steps
Maintenance steps

				Page
•			**1. Commissioning the system**	32
•		•	**2. Filling the heating system**	36
•	•	•	**3. Checking all connections on the heating water and DHW sides for leaks**	37
•			**4. Venting the heating system**	38
•			**5. Checking the gas type**	39
•			**6. Converting the gas type for operation with LPG**	39
•	•	•	**7. Removing the front panel**	39
•	•	•	**8. Checking the static pressure and supply pressure**	40
•			**9. Function sequence and possible faults**	42
•			**10. Setting the maximum heating output**	43
•			**11. Adjusting pump rate of integral circulation pump**	43
•			**12. Activating screed drying**	44
•			**13. Leak test on balanced flue system (annular gap check)**	45
•			**14. Burner adjustment when connecting multiple flues to a shared flue system**	45
		•	**15. Removing the burner**	46
	•	•	**16. Checking the burner gasket and burner gauze assembly**	47
	•	•	**17. Checking and adjusting the ignition and ionisation electrodes**	48
	•	•	**18. Checking the back draught safety devices**	48
		•	**19. Cleaning the heating surfaces**	49
	•	•	**20. Checking the condensate drain and cleaning the trap**	50
	•	•	**21. Installing the burner**	52
	•	•	**22. Checking the neutralising system (if installed)**	
		•	**23. Checking the flow limiter (only for gas condensing combi boiler)**	53
•	•	•	**24. Checking the expansion vessel and system pressure**	54
•	•	•	**25. Checking the safety valve function**	
•	•	•	**26. Checking the electrical connections for firm seating**	54
•	•	•	**27. Checking all gas equipment for leaks at operating pressure**	54
•	•	•	**28. Fitting the front panel**	55
•		•	**29. Checking the combustion quality**	55
•	•	•	**30. Checking the flue system for unrestricted flow and leaks**	
•	•	•	**31. Checking the external LPG safety valve (if installed)**	
•			**32. Matching the control unit to the heating system**	57
•			**33. Adjusting the heating curves**	57
•			**34. Instructing the system user**	57

6167586

Commissioning the system

! **Please note**
Only commission the appliance with a fully filled trap.
Check that the trap has been filled with water.

Commissioning via commissioning assistant

1. Open the gas shut-off valve.

2. If the appliance has not yet been switched on:
   1. Turn on the ON/OFF switch.
   2. **AP** and appear on the display.
   3. Press menu button for 4 s to start the commissioning assistant.

   If the appliance has already been switched on, you can call up the commissioning assistant yourself:
   1. and **OK** simultaneously for approx. 4 s.
   2. Use / to select **"b.5"** and confirm with **"OK"**.
      Note
      AP *and appear on the display. Confirm with* ***OK*** *to start the connection with the software tool: See chapter "Commissioning via software tool".*
   3. Press for 4 s to start the commissioning assistant.

3. For further steps, see commissioning assistant in the following overview.

Commissioning via software tool

Note
Apps for commissioning and service are available for iOS and Android devices.

Download on the App Store
GET IT ON Google Play

1. Open the gas shut-off valve.

2. **AP** and appear on the display.
   Press **OK** and enter the password for the heat generator to carry out commissioning with the software tool.

3. Select **ON** and confirm with **OK**.

4. Follow the instructions in the software tool.

6167586

Commissioning the system (cont.)

Commissioning assistant sequence	Explanations and references
Commissioning	
"C.1" Filling program	ON = on OFF = off ***Note*** *It is possible to interrupt or end the process while a rotating rectangle alternating with the current system pressure is displayed; to do so, press ≡ for 3 s.*
"C.2" Venting program	ON = on OFF = off ***Note*** *It is possible to interrupt or end the process while a rotating rectangle alternating with the current system pressure is displayed; to do so, press ≡ for 3 s.*
"C.3"[*1] Gas type	2 - Natural gas 3 - Liquid gas LPG
"C.5"[*1] Flue system	1 - Open flue 60 mm, rigid 2 - Room sealed 60/100 mm, rigid 3 - Open flue 80 mm, rigid 4 - Room sealed 80/125 mm, rigid 5 - Flexible 60 mm (room sealed or open flue) max. 10 m 6 - Flexible 80 mm (room sealed or open flue) max. 20 m
"C.6"[*1] Flue length	Given in full metres (round up if necessary) ***Note*** *An additional length of 1 m must be factored in for every flue bend.*
"C.7" Operating mode	1 - Constant operation with time program 4 - Weather-compensated 13 - Constant operation with optional room thermostat 14 - OpenTherm 15 - Individual room control 16 - Individual room control with modulation ***Note*** *Operating modes 15 and 16 can only be set via the software tool.* *If operating mode 15 or 16 is set, low power radio cannot be switched off!*

[*1] *This setting is not required for appliances with multiple connection "M".*
The gas type is preset to natural gas; the flue system and flue pipe length are automatically set correctly via the integral mass flow correction.

6167586

Commissioning the system (cont.)

Commissioning assistant sequence	Explanations and references
"C.8" System scheme (depending on appliance type, not all schemes possible)	1 - 1 direct heating circuit without low loss header 2 - 1 direct heating circuit with low loss header 3 - 1 direct heating circuit without low loss header with DHW cylinder 4 - 1 direct heating circuit with low loss header and DHW cylinder upstream of low loss header 5 - 1 direct heating circuit + 1 heating circuit with mixer and low loss header + DHW cylinder 6 - 1 direct heating circuit with low loss header + DHW cylinder upstream of low loss header + solar DHW cylinder 7 - 1 direct heating circuit + 1 heating circuit with mixer and low loss header + DHW cylinder upstream of low loss header + solar DHW cylinder 8 - 1 direct heating circuit + 1 heating circuit with mixer and low loss header 9 - 1 heating circuit with mixer and low loss header + DHW cylinder upstream of low loss header 10 - 1 direct heating circuit without low loss header + DHW cylinder + solar DHW cylinder ***Note*** *System schemes 11 - 18 and the DHW circulation pump can be set via the software tool.* 11 - 1 heating circuit with mixer without low loss header 12 - 1 heating circuit with mixer with low loss header 13 - 1 heating circuit with mixer without low loss header + DHW cylinder 14 - 1 direct heating circuit + 1 heating circuit with mixer without low loss header + DHW cylinder 15 - 1 heating circuit with mixer with low loss header + DHW cylinder + solar DHW cylinder 16 - 1 heating circuit with mixer without low loss header + DHW cylinder + solar DHW cylinder 17 - 1 direct heating circuit + 1 heating circuit with mixer without low loss header + DHW cylinder + solar DHW cylinder 18 - 1 direct heating circuit + 1 heating circuit with mixer without low loss header ***Note*** *If a DHW circulation pump has been configured via the software tool, it is shown with a "C" after the system scheme number.*
"C.9" External heating circuit hook-up	***Note*** *Only for weather-compensated operation.* 0 - No external heating circuit hook-up 1 - External heating circuit hook-up HC1 2 - External heating circuit hook-up HC2 3 - External heating circuit hook-up HC1 and HC2 (EM-EA1 extension (DIO) required)

6167586

Commissioning the system (cont.)

Commissioning assistant sequence	Explanations and references
"C.10" EM-EA1 (DIO) function ***Note*** *If "C.9" is set to 3, then no setting is required at "C.10".*	0 - No function 4 - External set flow temperature 0–10 V 5 - External default output 8 - 230 V fault message input and fault message output (without system blocking) 9 - External LPG valve 10 - External extractor (e.g. cooker hood) 11 - Operating mode changeover 14 - Fault message input 24 V and system blocking (e.g. condensate lift pump) 17 - 230 V fault message input and system blocking 18 - External demand (digital) 19 - External blocking
"C.11" Date (day, month, year)	
"C.12" Time (hours, minutes)	
"C.13" Autom. summer/winter-time changeover	ON = on OFF = off
"C.14" Plug 96 function	0 - No function 2 - External demand DHW circulation pump 4 - External demand 5 - External blocking If only one HC was configured with external hook-up, plug 96 setting is automatically applied. No selection or other function is then possible.
"C.15" Remote control	Off - not installed ON - Vitotrol 200-E with subscriber number 1 installed (all installed heating circuits can be controlled via the Vitotrol 200-E)
	After the final setting (C.15) has been completed, **"End"** appears on the display. Confirm with **"OK"**. The commissioning is started, the flue temperature sensor test is launched and **"Fst"** appears on the display.
Maintenance	
Interval in burner hours run until next maintenance	Can be adjusted via software tool (notification also via software tool)
Interval until next maintenance	Can be adjusted via software tool (notification also via software tool)
The system carries out a restart.	

Automatic flue gas temperature sensor check

The display shows: **"Err"**
If the flue gas temperature sensor is not positioned correctly, fault message 416 appears.
For further details regarding the flue gas temperature sensor test, see "Repairs".
If fault message 416 appears, reposition the flue gas temperature sensor in the flue gas connection. Check for leaks on the flue gas side.

Note
The burner remains locked out until the test has been passed.

When the fault has been remedied, turn the ON/OFF switch off and back on again.

Commissioning the system (cont.)

Switching WiFi on/off

The appliance is equipped with an integrated (2.4 GHz) WiFi communication module with extended type plate.
This WiFi communication module supports commissioning, maintenance and servicing with "ViGuide" online or the "ViGuide App" as well as operation via the "ViCare app".
Three labels with the access details required for establishing the connection are attached at the factory to the front of the programming unit. The access code is marked with a "WiFi symbol".

Remove these 3 labels. Apply the labels in the following positions:
- For commissioning, affix a label to the place marked on the type plate.
- For later use, apply a label here:

Fig. 23

- Affix label in the field provided for the purpose in the operating instructions.

Switch on the WiFi connection. Establish a connection to the router:
- Information on WiFi: See chapter "WiFi operational reliability and system requirements".
- **Establishing an internet connection**
  Operating instructions

Note
*If **"E10"** is displayed, the connection to the home network could not be established. Check the router and the network password.*
*If **"E12"** is displayed, the connection to the server could not be established. Re-establish the connection at a later time.*

Note
*If the communication module is to be switched on or off, press ∨ and **OK** simultaneously for 4 s.*

Filling the heating system

According to EN 1717, as a heat transfer medium for DHW heating, the heating water must meet fluid category ≤ 3. This requirement is met if water of potable quality is used as heating water. For example, if additives are used, the additive manufacturer must specify which category the treated heating water comes under.

! **Please note**
Unsuitable fill water increases the level of deposits and corrosion and may lead to appliance damage.
- Flush the heating system thoroughly before filling.
- Only fill with water of potable quality.
- Fill water with a hardness above 300 ppm must be softened.
- Special antifreeze suitable for heating systems can be added to the fill water. The antifreeze manufacturer must verify its suitability.

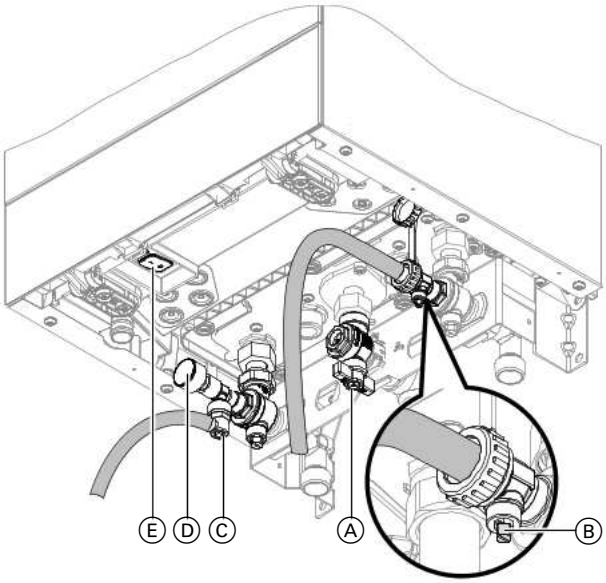

Fig. 24

1. Check the pre-charge pressure of the expansion vessel.

6167586

Filling the heating system (cont.)

2. Close gas shut-off valve Ⓐ.

3. Activate the filling function (see commissioning assistant or following chapter).

4. Fill the heating system at boiler drain & fill valve Ⓑ in the heating return (on the connection set or on site). Minimum system pressure > 1.0 bar (0.1 MPa). Check the system pressure at pressure gauge Ⓓ. The indicator must be in the green band. If necessary, open the on-site air vent valves.

   Note
   Ensure that the safety valve does not respond when you are filling the system. If the flow rate through the safety valve becomes too high, water may enter the combustion chamber.

5. Fit hose to air vent valve Ⓒ. Route the hose into a suitable container or drain outlet.

6. Close the shut-off valves on the heating water side.

7. Open air vent valve Ⓒ and fill valve Ⓑ in the heating return. Vent (flush) under mains pressure until no more air noise is audible.

8. Close air vent valve Ⓒ and boiler drain & fill valve Ⓑ.
   Check the system pressure at pressure gauge Ⓓ. The indicator must be in the green band.

9. Open the shut-off valves on the heating water side.

Activating the filling function

If the filling function is to be activated after commissioning.

Tap the following buttons:

1. ≡ and **OK** simultaneously for approx. 4 s, then release.

2. Use ∧/∨ to select **"b.5"** for the commissioning assistant.

3. **OK**

4. The display shows **"AP"**.
   Press ≡ for 4 s.

5. Use ∧/∨ to select **"C.1"** for the filling function.

6. **OK**

7. ∧/∨ to select **"ON"** for filling.

8. **OK**
   The filling function is activated. The display shows a rotating rectangle.
   The filling function ends automatically after 20 min or press ≡ for 4 s.

Checking all connections on the heating water and DHW sides for leaks

⚠ **Danger**
There is a risk of electric shock from escaping heating water or DHW.
When commissioning and after carrying out maintenance work, check all water side connections for leaks.

! **Please note**
Leaking hydraulic connections lead to appliance damage.
- Check the internal and on-site hydraulic connections for leaks.
- In the event of leaks, switch off the appliance immediately. Drain the heating water. Check the seating of seal rings. **Always** replace displaced seal rings.

Venting the heating system

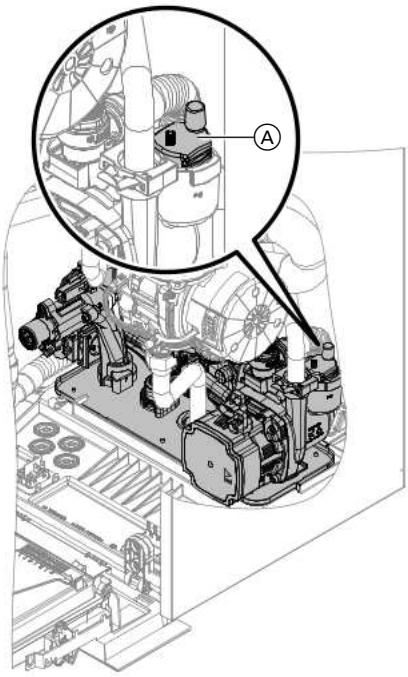

Fig. 25

1. Check whether the air vent screw in quick-action air vent valve Ⓐ of the heating circuit pump is open.
2. Close the gas shut-off valve and switch the appliance ON.
3. Activate the venting program (see commissioning assistant or following chapter).
4. Adjust the system pressure.
   The display shows the system pressure.
5. Disconnect the supply hose from the boiler drain & fill valve.
6. Open the gas shut-off valve.

Note
Leave the quick-action air vent valve open once the venting program has finished.

Activating the venting function

If the venting function is to be activated after commissioning.

Tap the following buttons:

1. ≡ and **OK** simultaneously for approx. 4 s, then release.
2. Use ∧/∨ to select **"b.5"** for the commissioning assistant.
3. **OK**
4. The display shows **"AP"**.
   Press ≡ for 4 s.
5. Use ∧/∨ to select **"C.2"** for venting.
6. **OK**
7. ∧/∨ to select **"ON"** to switch on venting.
8. **OK**
   The venting function is activated. The display shows a rotating rectangle.
   The venting function ends automatically after 20 min or press ≡ for 4 s.

6167586

Checking the gas type

The boiler is equipped with an electronic combustion controller that adjusts the burner for optimum combustion in accordance with the prevailing gas quality.

- For operation with natural gas, no adjustment is therefore required across the entire Wobbe index range. The boiler can be operated within the Wobbe index range 9.5 to 15.2 kWh/m^3 (34.2 to 54.7 MJ/m^3).
- For operation with LPG, the gas type needs to be changed on the control unit (see following chapter).

1. Determine the gas type and Wobbe index by asking your local gas supply utility or LPG supplier.
2. Record the gas type in the service report.

Converting the gas type for operation with LPG

1. To change the gas type on the control unit, see "Commissioning the system with the commissioning assistant"

   Note
   No mechanical adjustments are made to the gas solenoid valve.

2. Affix label "G31" (supplied with the technical documentation) adjacent to the type plate on the cover panel.

Removing the front panel

Danger
Contact with live components can lead to serious injury from electric current. Some components on PCBs remain live even after the power supply has been switched off.

- **Never touch** the wiring chambers (control unit and power supply connections).
- When working on the appliance, isolate the system from the power supply, e.g. at a separate MCB/fuse or a mains isolator. Check the system is no longer live and safeguard against reconnection.
- Prior to working on the appliance, wait at least 4 min until the voltage has completely dropped out.

Removing the front panel (cont.)

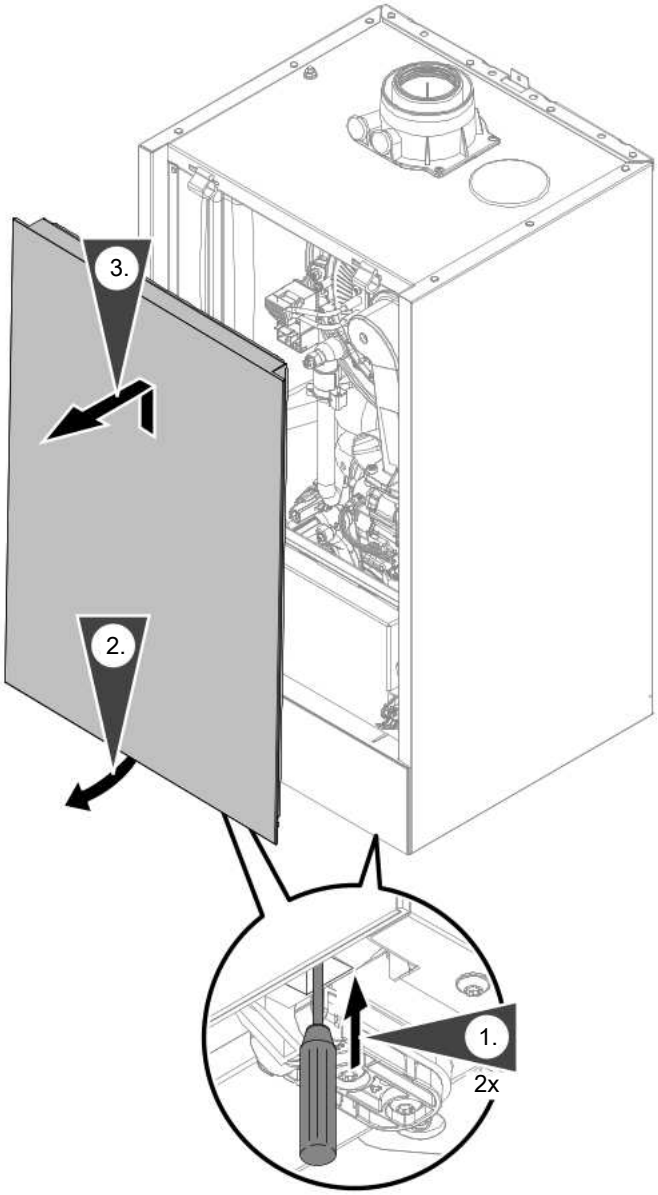

Fig. 26

Checking the static pressure and supply pressure

Danger
CO formation as a result of incorrect burner adjustment can have serious health implications. Always carry out a CO test before and after work on gas appliances.

Gas installation to BS 6891:2005

It is the gas installer's responsibility to size the gas installation lines in accordance with BS 6891:2005. If it is determined that the operating pressure falls below the minimum outlet level for the measuring device of 19 mbar: Check and ensure that the gas pressure is sufficient for correct and safe operation.

Taking into account a pressure drop from the installation lines of no more than 1 mbar, it can be assumed that a permissible minimum pressure of 18 mbar is present at the appliance's gas connection (reference BS 6400-1 Section 6.2, Pressure absorption).
The external gas tap may reduce operating pressure further if measured at its test point. The pressure drop is relative to the heat input of the boiler (kW).
Observe minimum gas pressure at the gas fitting in accordance with the table – see page 41

Operation with LPG

Purge the LPG tank twice on commissioning/replacement. Vent the tank and gas connection line thoroughly after purging.

6167586

Checking the static pressure and supply pressure (cont.)

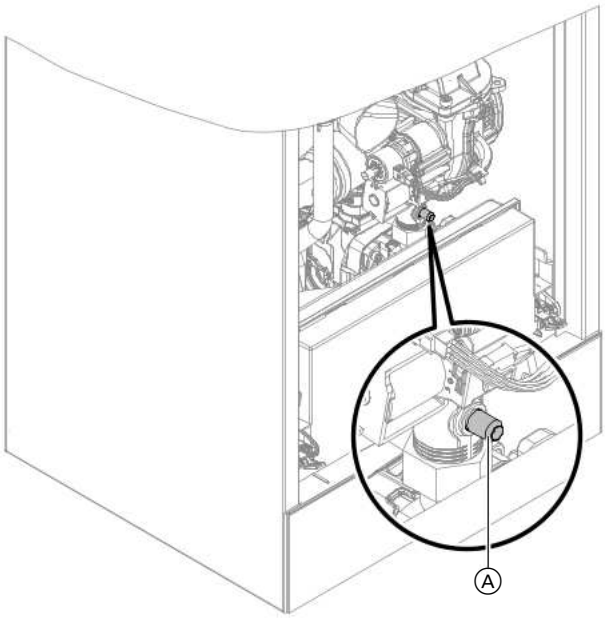

Fig. 27

1. Turn off the ON/OFF switch.
2. Close the gas shut-off valve.
3. Undo screw Ⓐ inside test connector on the gas solenoid valve, but do not remove it. Connect the pressure gauge.
4. Open the gas shut-off valve.
5. Measure the static pressure and record it in the report:
   Max. 57.5 mbar (5.75 kPa).
6. Turn on the ON/OFF switch and start the boiler.

   Note
   During commissioning, the appliance can enter a fault state if there are airlocks in the gas line. Reset the appliance after approx. 5 s (see operating instructions).

7. Measure the supply (flow) pressure. For set values, see the following table.

   Note
   Use a suitable measuring device with a resolution of at least 0.1 mbar (0.01 kPa) to check the supply pressure.

8. Record the measured value in the report. Implement measures as indicated in the table below.
9. Shut down the boiler. Close the gas shut-off valve. Remove the pressure gauge. Close test connector Ⓐ with the screw.
10. Open the gas shut-off valve and start the appliance.

    Danger
    Gas escaping from the test connector leads to a risk of explosion.
    Check gas tightness at test connector Ⓐ.

11. Fit front panel (see installation sequence).

Supply pressure (flow pressure)		Measures
For natural gas	**For LPG**	
< 13 mbar (1.3 kPa)	< 25 mbar (2.5 kPa)	Do not start the boiler. Notify the gas supply utility or LPG supplier.
13 to 25 mbar (1.3 to 2.5 kPa)	25 to 57.5 mbar (2.5 to 5.75 kPa)	Start the boiler.
> 25 mbar (2.5 kPa)	> 57.5 mbar (5.75 kPa)	Install a separate gas pressure governor upstream of the system. Set the pre-charge pressure to 20 mbar (2.0 kPa) for natural gas and 50 mbar (5.0 kPa) for LPG. Notify the gas supply utility or LPG supplier.

Function sequence and possible faults

		Display		Measure
Control unit issues a heat demand	No →			Increase set value. Ensure heat transfer.
↓ Yes				
Fan starts	No →	Fault 59, 457	→	Check the fan connecting cables. Check the fan power supply.
↓ Yes				
Ignition	No →	Fault 359	→	Check ignition module (control voltage 230 V across plug "X1/54" terminals "L" and "N" on the HBMU). Check the gas supply.
↓ Yes				
Gas solenoid valve opens	No →	Fault 357	→	Check the gas supply pressure.
↓ Yes				
Ionisation current builds	No →	Fault 369, 380	→	Check distance of ionisation electrode on burner gauze assembly. Purge the gas line.
↓ Yes				
Burner in operation	No →	Shuts down below the set boiler water temperature and restarts immediately.	→	Check the flue system for tightness (flue gas recirculation). Check gas flow pressure.
↓ Yes				
Automatic calibration of the combustion controller	No →	Fault 62, 373	→	Ensure adequate heat transfer. Reset the appliance.
		Fault 346, 377		Check gap between ionisation electrode and burner gauze assembly. Check the flue system. Remove flue gas recirculation if necessary. Reset the appliance. Operating instructions

For further details regarding faults, see "Troubleshooting".

6167586

Setting the maximum heating output

A limit can be set on the maximum heating output for **heating mode**. The limit is set via the modulation range.

B1HF-11
*The max. heating output is **not** adjustable.*

Tap the following buttons:

1. ≡ and **OK** simultaneously for approx. 4 s, then release.
2. Use ∧/∨ to select **"b.2"** for system configuration.
3. **OK**
4. Use ∧/∨ to select **"7"** for max. heating output.
5. **OK**
6. Use ∧/∨ to set the required value in % of rated heating output. Factory setting 100 %.
7. **OK**

Adjusting pump rate of integral circulation pump

Operation of the integral circulation pump as heating circuit pump for heating circuit 1

The pump speed and consequently the pump rate are controlled subject to the outside temperature and the switching times for heating mode or reduced mode. The max. speed for heating mode can be matched to the existing heating system at the control unit.

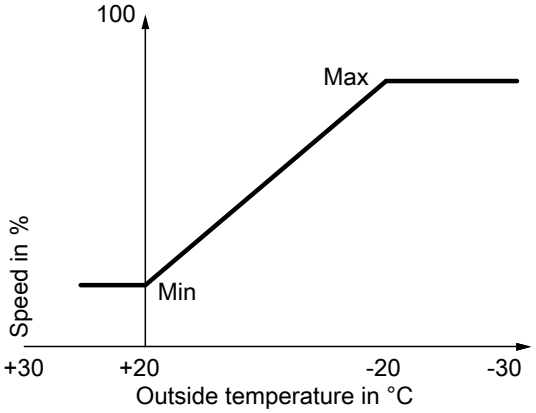

Fig. 28

Setting (%) in system configuration. See page 58.

- In the delivered condition, the minimum pump rate and the maximum pump rate are set to the following values:

Rated heating output in kW	Speed settings in the delivered condition in %	
	Min. pump rate	Max. pump rate
11	40	60
19	40	65
25	40	75
32	40	100

- In the following system conditions, the internal circulation pump is operated at a constant speed:
  - Low loss header or heating water buffer cylinder and heating circuits with mixer
  - Constant operation

6167586

Adjusting pump rate of integral circulation pump (cont.)

Residual head of integral circulation pump

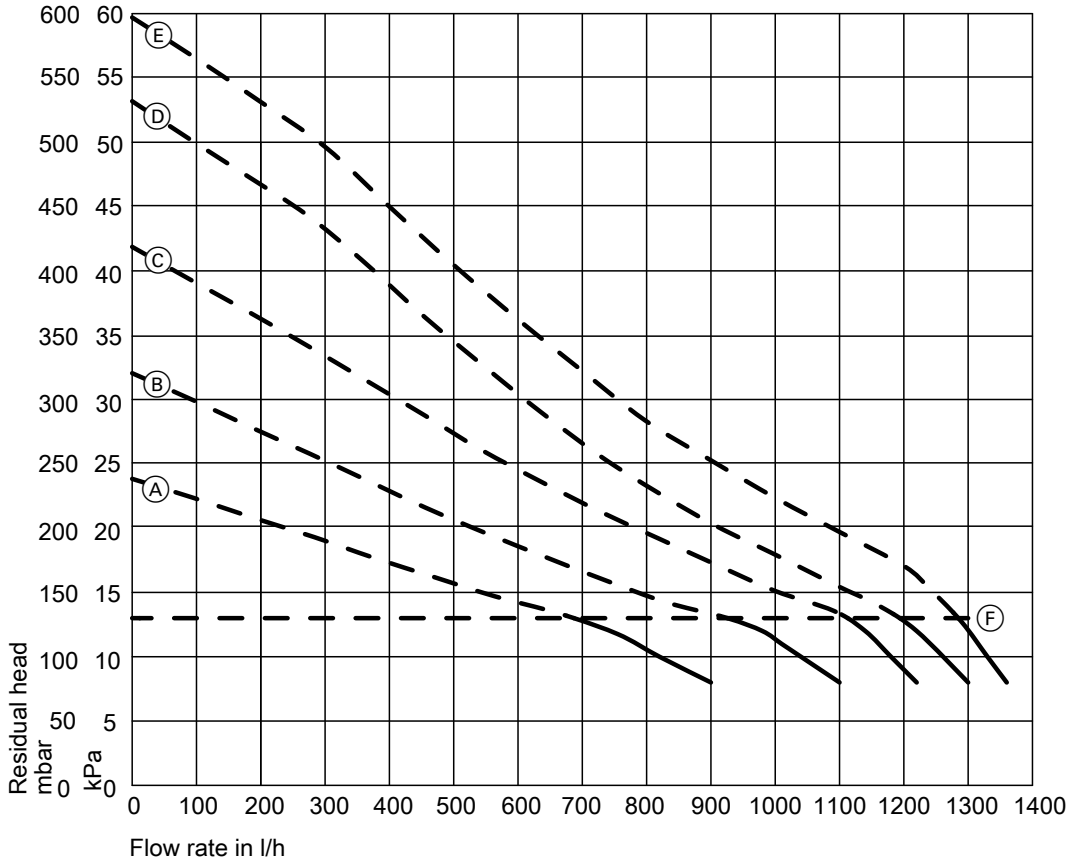

Fig. 29

Ⓕ Upper operational limit

Curve	Pump rate of circulation pump
Ⓐ	60 %
Ⓑ	70 %
Ⓒ	80 %
Ⓓ	90 %
Ⓔ	100 %

Activating screed drying

Screed drying

Six different temperature profiles can be set for screed drying:
Default temperature profiles adjustable in **"System configuration"**.
For further details, see "Function description".

Note
Screed drying applies to all connected heating circuits simultaneously. DHW heating is not possible during screed drying.

6167586

Leak test on balanced flue system (annular gap check)

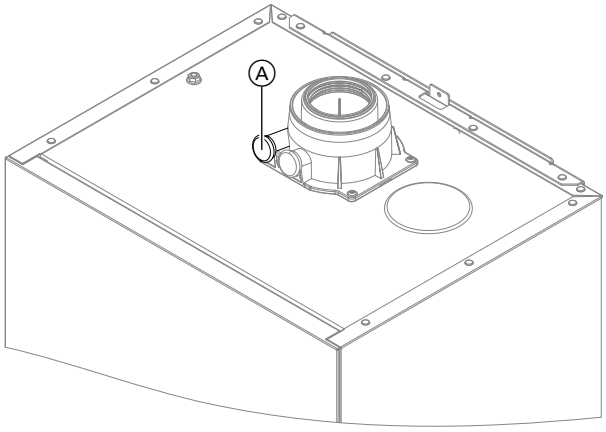

Fig. 30

Ⓐ Combustion air aperture

For balanced flue systems tested together with the heat generator, there is no requirement for a tightness test (overpressure test) during commissioning by the flue gas inspector.
In this case, we recommend that a simple tightness test is carried out during system commissioning. For this, check the CO_2 or O_2 concentration in the combustion air at the annular gap of the balanced flue pipe.
If the CO_2 concentration is less than 0.2 % or the O_2 concentration is greater than 20.6 %, the flue pipe is deemed to be sufficiently gas-tight.

If actual CO_2 values are greater or O_2 values are lower, then pressure test the flue pipe with a static pressure of 200 Pa.

! **Please note**
If the test port is not sealed, combustion air is drawn in from the room.
After the tightness test, re-seal the test port with the plug.

Burner adjustment when connecting multiple flues to a shared flue system

Note
Only make this adjustment on appliances suitable for multiple connection.
For suitable Vitodens appliances, see pricelist.

When connecting several Vitodens 100-W to a common flue system:
For multiple connection, in the **commissioning assistant** use **"C.4"**, **"C.5"** and **"C.6"** to match the burner setting to the flue system. See page 32.

System conditions:
- Shared flue in shaft ∅ 100 mm
- Balanced flue connection pipe from boiler to shaft, ∅ 80/125 mm
- Minimum shaft cross-section
  - Square: 175 x 175 mm
  - Round: ∅ 195 mm
- Height between floors min. 2.5 m
- Max. 6 boilers with the same rated heating output connected to the flue system

Removing the burner

Danger
Contact with live components can lead to serious injury from electric current. Some components on PCBs remain live even after the power supply has been switched off.

- **Never touch** the wiring chambers (control unit and power supply connections).
- When working on the appliance, isolate the system from the power supply, e.g. at a separate MCB/fuse or a mains isolator. Check the system is no longer live and safeguard against reconnection.
- Prior to working on the appliance, wait at least 4 min until the voltage has completely dropped out.

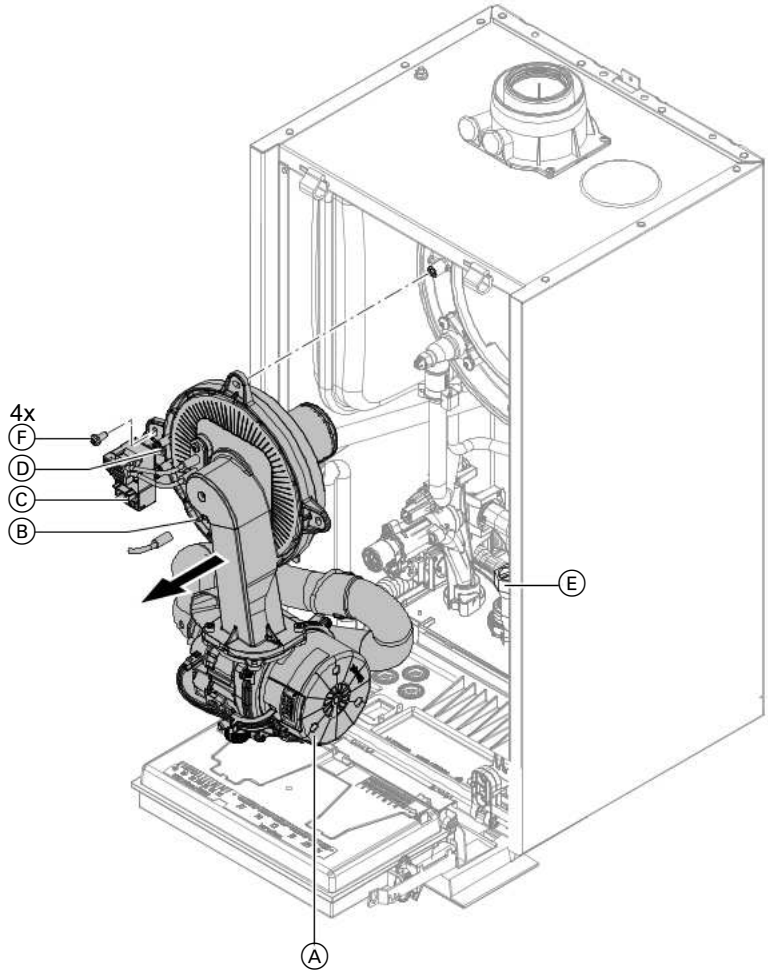

Fig. 31

1. Turn off the ON/OFF switch.
2. Close the gas shut-off valve and safeguard against reopening.
3. Disconnect cables and leads from:
   - Fan motor Ⓐ (2 plugs)
   - Ionisation electrode Ⓑ
   - Ignition unit Ⓒ
   - Earth Ⓓ
4. Undo gas supply pipe fitting Ⓔ.
5. Undo 4 screws Ⓕ and remove the burner.

   Note
   Cover gas connection Ⓔ so that no small parts can fall into it.

6167586

Checking the burner gasket and burner gauze assembly

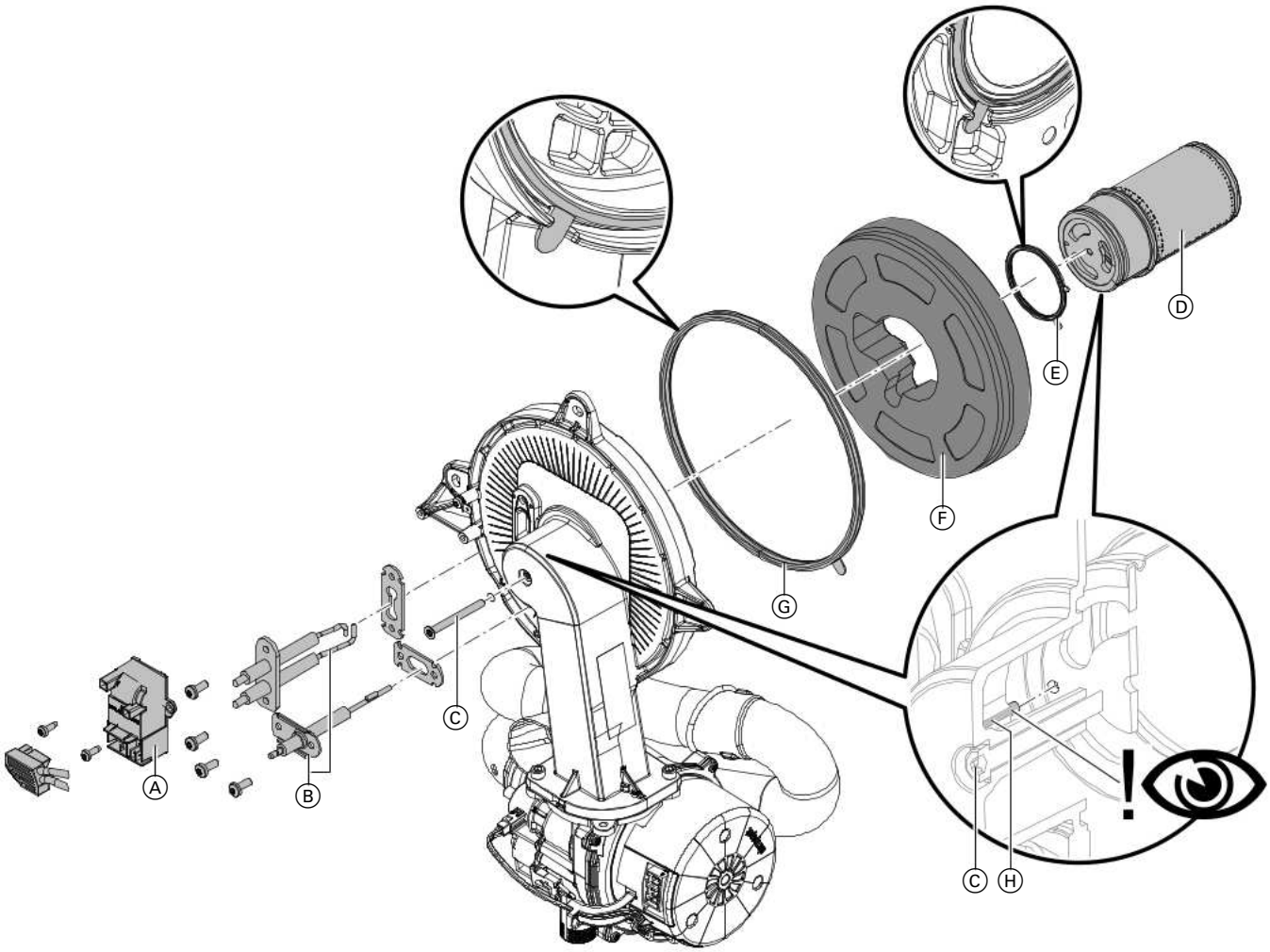

Fig. 32

Check burner gauze assembly Ⓓ, electrodes Ⓑ, thermal insulation ring Ⓕ and gasket Ⓖ for damage. Only remove and replace components if they are damaged or worn.

Note
If replacing the burner gauze assembly, also replace the gauze assembly gasket and the fixing screw.

1. Disconnect plug with ignition electrode leads from ignition unit Ⓐ.
2. Remove electrodes Ⓑ.
3. Undo Torx screw Ⓒ. Hold onto burner gauze assembly Ⓓ when undoing the screw.
4. Remove burner gauze assembly Ⓓ with gasket Ⓔ and thermal insulation ring Ⓕ. Check components for damage.
5. Install new burner gasket Ⓖ. Observe correct installation position. Align the tab as per the diagram.
6. Insert thermal insulation ring Ⓕ and burner gauze assembly Ⓓ with gasket Ⓔ. Observe correct installation position. Align the tab as per the diagram.
7. Align the hole in burner gauze assembly Ⓓ with burner door pin Ⓗ.

   ! **Please note**
   Incorrect positioning of the burner gauze assembly on the burner door will cause damage to the burner door.
   Insert the burner door pin into the hole in the burner gauze assembly.

   Secure burner gauze assembly Ⓓ and gasket Ⓔ with Torx screw Ⓒ.
   Tighten screws as tightly as necessary and ensure that the components are undamaged and are functioning correctly throughout service life.
   Observe torque settings if a torque wrench is available.
   Torque: 3.0 Nm.
8. Check thermal insulation ring Ⓕ for firm seating.

6167586

Checking the burner gasket and burner gauze… (cont.)

9. Fit electrodes Ⓑ. Check clearances, see following chapter.
Tighten screws as tightly as necessary and ensure that the components are undamaged and are functioning correctly throughout service life.
Observe torque settings if a torque wrench is available.
Torque: 4.5 Nm.

Checking and adjusting the ignition and ionisation electrodes

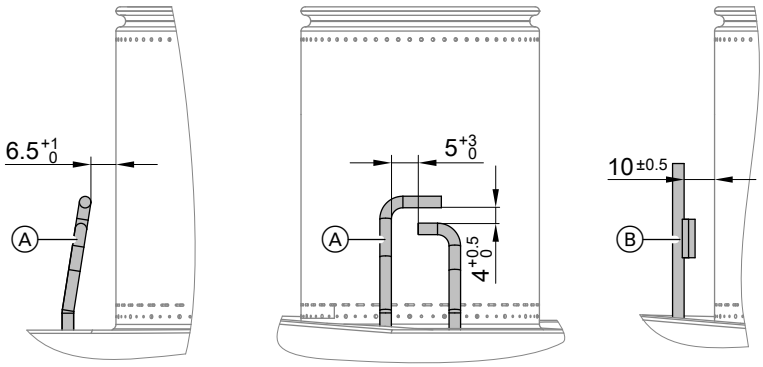

Fig. 33

Ⓐ Ignition electrodes
Ⓑ Ionisation electrode

1. Check the electrodes for wear and contamination.

2. Clean the electrodes with a small brush (not a wire brush) or sandpaper.

3. Check the electrode gaps. If the gaps are not as specified or the electrodes are damaged, replace the electrodes and gaskets and adjust them as required.
Tighten screws as tightly as necessary and ensure that the components are undamaged and are functioning correctly throughout service life.
Observe torque settings if a torque wrench is available.
Tighten the electrode fixing screws to a torque of 4.5 Nm.

Checking the back draught safety devices

Only for multiple connections to a flue system or multi boiler systems with a flue gas cascade.

Checking the back draught safety devices (cont.)

Back draught safety device in the mixing shaft of the burner

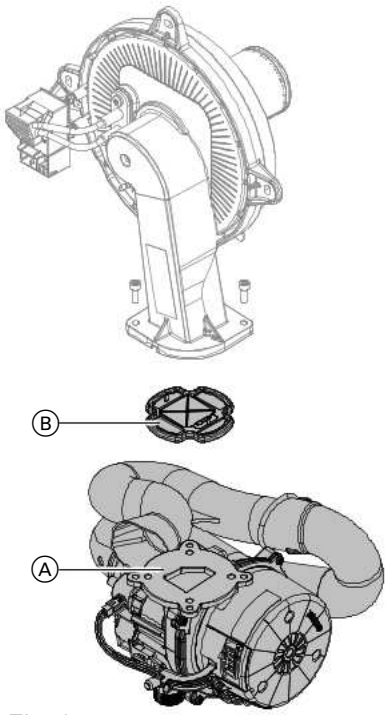

Fig. 34

1. Undo 2 screws and remove fan Ⓐ.
2. Remove back draught safety device Ⓑ.
3. Check the damper and gasket for dirt and damage. Replace if necessary.
4. Refit back draught safety device Ⓑ.

   Note
   Observe correct installation position.

5. Refit fan Ⓐ and secure with 2 screws.
   Tighten screws as tightly as necessary and ensure that the components are undamaged and are functioning correctly throughout service life.
   Observe torque settings if a torque wrench is available.
   Torque: 4.0 Nm

Back draught safety device in the flue gas connection

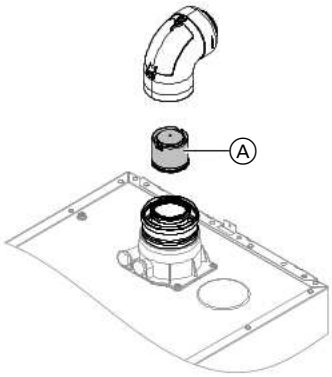

Fig. 35

1. Remove the balanced flue system.

   Note
   If the balanced flue system cannot be removed, clean and check the back draught safety device via the inspection cover.

2. Check back draught safety device Ⓐ for dirt, ease of movement and function.
3. Refit the balanced flue system.
4. Pour a small amount of water through the inspection port to ensure the back draught safety device is working.

Cleaning the heating surfaces

! **Please note**
Scratches to the surfaces of the heat exchanger that come into contact with hot gas can result in corrosion damage. Brushing can cause deposits to become lodged in the gaps between the coils. **Never use brushes to clean the heating surfaces.**

! **Please note**
Prevent damage due to cleaning water.
Cover electronic components with suitable watertight material.

Cleaning the heating surfaces (cont.)

Note
Discolouration on the heat exchanger surface is a normal sign of use. It has no bearing on the function and service life of the heat exchanger.
The use of chemical cleaning agents is not required.

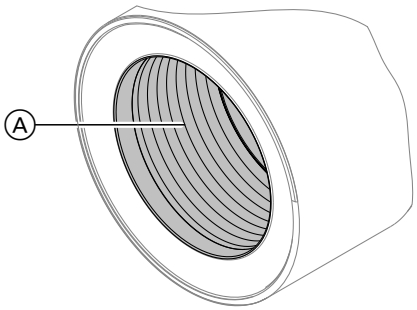

Fig. 36

1. Use a vacuum cleaner to remove combustion residues from heating surface Ⓐ of the heat exchanger.
2. Flush heating surface Ⓐ with water.
3. Check condensate drain. Clean the trap: See the following chapter.
4. Check the thermal insulation mat (if installed) in the heat exchanger for damage, replace if necessary.

Checking the condensate drain and cleaning the trap

! **Please note**
Prevent damage due to condensate.
Cover electronic components with suitable watertight material.

Checking the condensate drain and cleaning the… (cont.)

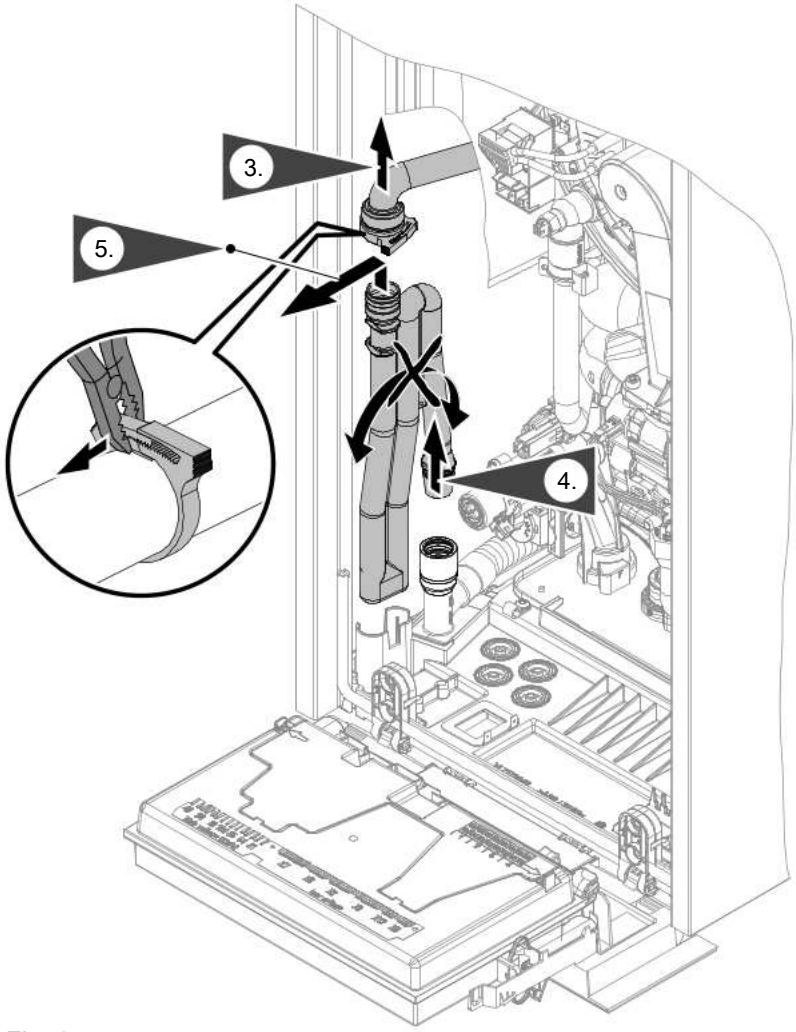

Fig. 37

1. Pivot the HBMU heat management unit forwards.
2. Cover electronic components with suitable water-tight material.
3. Undo the hose clip. Remove the black supply hose.
4. Pull trap upwards out of the drain hose.
5. Hold trap as straight as possible and remove. Ensure that no condensate runs out.
6. Clean the trap.
7. Fill the trap with water and refit it on the drain hose.

   Please note
   If the trap is not filled with water, flue gas can escape.
   Only start the appliance when the trap has been filled.
   Check that the trap is seated correctly.

Multi boiler system:
Clean the trap in the flue gas collector as well.

8. Reconnect the supply hose and secure in place with the hose clip.
9. **Danger**
   Risk of electric shock from escaping condensate.
   Check the connections for leaks and check that the trap is seated correctly.

Note
Route the drain hose without any bends and with a constant fall.

6167586

Installing the burner

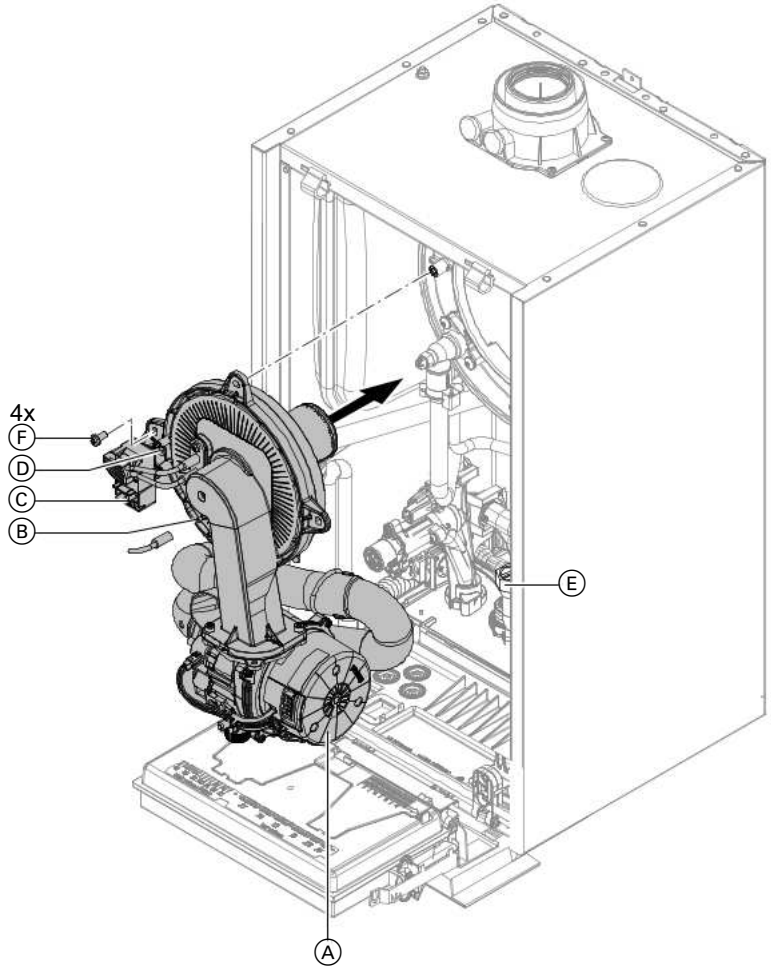

Fig. 38

1. Insert the burner. Tighten screws Ⓕ diagonally. Tighten screws as tightly as necessary and ensure that the components are undamaged and are functioning correctly throughout service life.
   Observe torque settings if a torque wrench is available.
   Torque: 6.5 Nm

2. Fit gas connection pipe Ⓔ with a new gasket. Tighten screws as tightly as necessary and ensure that the components are undamaged and are functioning correctly throughout service life.
   Observe torque settings if a torque wrench is available.
   Check for gas tightness to BSI 6891.
   Torque: 30 Nm

3. Check the gas connections for leaks.

   ⚠ **Danger**
   Escaping gas leads to a risk of explosion. Check all fittings for gas tightness. In the case of wall mounted appliances, also check the gas shut-off valve fitting on the underside.

4. Connect the cables/leads:
   - Fan motor Ⓐ (2 plugs)
   - Ionisation electrode Ⓑ
   - Ignition unit Ⓒ
   - Earth Ⓓ

Checking the neutralising system (if installed)

6167586

Checking the flow limiter (only for gas condensing combi boiler)

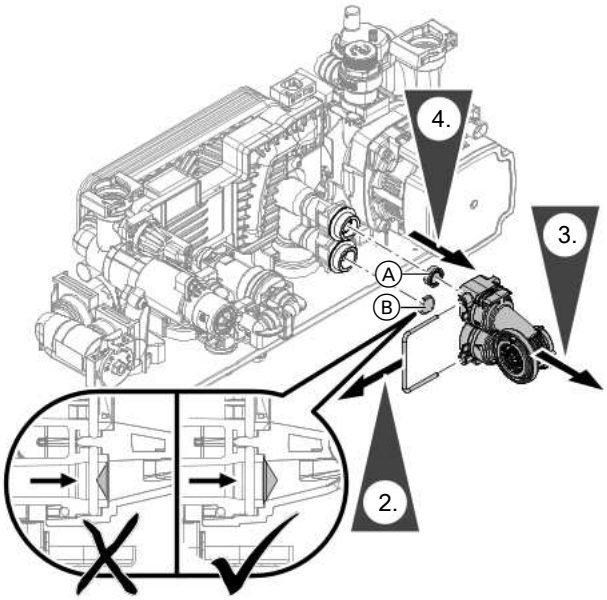

Fig. 39

1. Drain the boiler on the DHW side.
2. Remove the spring clip.
3. Remove the DHW flow sensor.
4. Check flow limiter Ⓐ and filter strainer Ⓑ. Replace if scaled or damaged.

   Note
   The taper of filter strainer Ⓑ must be installed in the direction of flow.

   Note
   Filter strainer Ⓑ is only installed in appliances as shown in the diagram on the right:

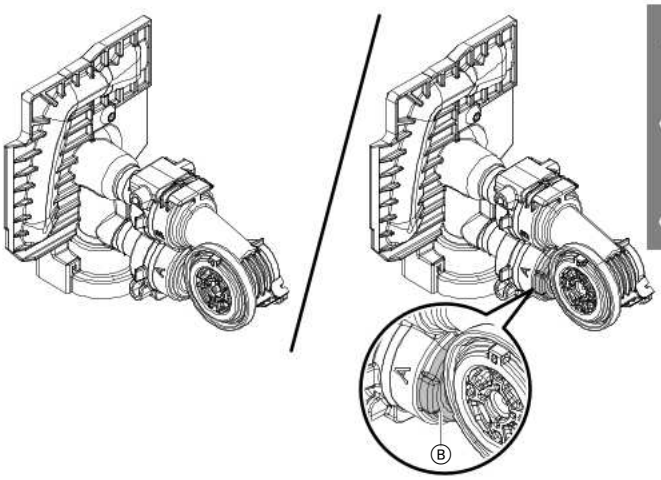

Fig. 40

5. Mount DHW flow sensor with new gaskets.

   Danger
   Risk of electric shock from escaping heating water or DHW
   Check all water side connections for tightness.

Flow limiter

Appliance type	Flow rate l/min	Colour
B1KF-26 (GB)	10	Light blue
B1KF-30 (GB)	12	Red
B1KF-35 (GB)	14	Pink

6167586

Checking the expansion vessel and system pressure

Note
The expansion vessel can lose some of its charge pressure over time. When the boiler heats up, the pressure rises to 2 or 3 bar (0.2 or 0.3 MPa). The safety valve may also respond and discharge the excess pressure.
Therefore check the expansion vessel pre-charge pressure annually.

Check whether the installed expansion vessel is adequate for the system water volume.
Carry out this test on a cold system.

1. Drain the system until "0" is shown on the display.

   Note
   For pressure indicator on the home screen, ≡ *repeatedly until the pressure gauge symbol appears.*

2. If the pre-charge pressure of the expansion vessel is lower than the static system pressure: Top up with nitrogen at the valve of the diaphragm expansion vessel until the pre-charge pressure is 0.1 to 0.2 bar (10 to 20 kPa) higher than the static system pressure.

3. Top up with water until the charge pressure of the cooled system is at least 1.0 bar (0.1 MPa), and is 0.1 to 0.2 bar (10 to 20 kPa) higher than the pre-charge pressure of the expansion vessel.
   Permiss. operating pressure: 3 bar (0.3 MPa)

   Note
   The expansion vessel is supplied from the factory with a pre-charge pressure of 0.7 bar.
   Do not allow the pre-charge pressure to fall below this value (boiling noises). This also applies to single floor heating systems or attic heating centres (no static pressure).
   Top up with water until the charge pressure is 0.1 to 0.2 bar above the pre-charge pressure.

Checking the safety valve function

Checking the electrical connections for firm seating

Danger
Contact with live components can lead to serious injury from electric current. Some components on PCBs remain live even after the power supply has been switched off.
- **Never touch** the wiring chambers (control unit and power supply connections).
- When working on the appliance, isolate the system from the power supply, e.g. at a separate MCB/fuse or a mains isolator. Check the system is no longer live and safeguard against reconnection.
- Prior to working on the appliance, wait at least 4 min until the voltage has completely dropped out.

Checking all gas equipment for leaks at operating pressure

Danger
Escaping gas leads to a risk of explosion.
Check gas equipment (including inside the appliance) for leaks.

Checking all gas equipment for leaks at… (cont.)

Note
Only use suitable and approved leak detection agents (EN 14291) and devices for the tightness test. Leak detection agents with unsuitable constituents (e.g. nitrides, sulphides) can cause material damage. Remove residues of the leak detection agent after testing.

Fitting the front panel

See page 30.

Checking the combustion quality

The electronic combustion controller automatically ensures optimum combustion quality. During commissioning/maintenance, only the combustion values need to be checked. To do this, test the CO content and CO_2 or O_2 content, and record these in the report on page 110.

Note
To prevent operating faults and damage, operate the appliance with uncontaminated combustion air.

Permissible CO content

The CO content must be < 1000 ppm for all gas types.

Permissible CO_2 or O_2 content

Operation with natural gas

Rated heating output (kW)	CO_2 content (%)		O_2 content (%)	
	Upper heating output	Lower heating output	Upper heating output	Lower heating output
11	7.3 to 10.5	7.3 to 10.5	2.1 to 7.9	2.1 to 7.9
19	7.5 to 10.5	7.5 to 10.5	2.1 to 7.6	2.1 to 7.6
25	7.5 to 10.5	7.5 to 10.5	2.1 to 7.6	2.1 to 7.6
32	7.3 to 10.0	7.3 to 10.5	3.1 to 7.9	2.1 to 7.9

Operation with LPG

- CO_2 content: 8.4 to 11.8 %
- O_2 content: 3.1 to 8.1 %

If the actual CO, CO_2 or O_2 values lie outside their respective ranges, proceed as follows:
- Check the balanced flue system for leaks; see page 45.
- Check the ionisation electrode and connecting cable, see page 48.

Note
During commissioning, the combustion controller carries out an automatic calibration. Allow approx. 50 s after the burner has started before testing the emissions.

Checking the combustion quality (cont.)

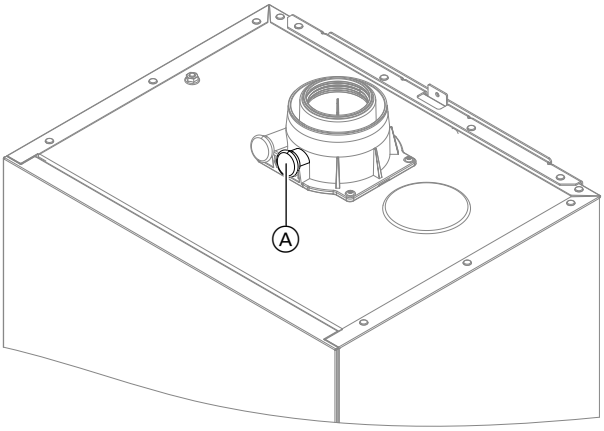

Fig. 41

1. Connect a flue gas analyser at flue gas port Ⓐ on the boiler flue connection.
2. Open the gas shut-off valve. Start the boiler. Create a heat demand.
3. Adjust the lower heating output. See the following chapter.
4. Check the CO_2 content. If the actual value deviates from the permissible ranges, implement steps listed above.
5. Enter the actual value into the report.
6. Adjust the upper heating output. See the following chapter.
7. Check the CO_2 content. If the actual value deviates from the permissible ranges by more than 1 %, implement steps listed above.
8. Enter the actual value into the report.
9. Re-seal test port Ⓐ.

Danger
Escaping flue gas can damage your health.
Check test port Ⓐ for leaks.

Regulating to the upper/lower heating output

Note
Ensure adequate heat transfer.

Tap the following buttons:

1. ≡ and **OK** simultaneously for approx. 4 s, then release.
2. Use ∧/∨ to select **"b.6"** for the upper/lower heating output.
3. **OK**
4. Use ∧/∨ to set the value.
   "OF" - off
   "1" - Min. heating output
   "2" - Max. heating output
5. **OK**
   Burner is operating with correspondingly adjusted heating output.

Checking the flue system for unrestricted flow and leaks

Checking the external LPG safety valve (if installed)

Matching the control unit to the heating system

The control unit must be matched to the system equipment level.
Set the parameters according to the accessories fitted:

Accessory installation instructions

Adjusting the heating curves

Tap the following buttons:

1. ≡
2. Use ∧/∨ to select **"P.3"** for heating curve.
3. **OK**
4. Use ∧/∨ to select **"HC1"** for "heating circuit 1" or **"HC2"** for "heating circuit 2".
5. **OK**
6. Use ∧/∨ to set the slope.
7. **OK**
8. Use ∧/∨ to set the level.
9. **OK** to confirm

Instructing the system user

The system installer should hand the operating instructions to the system user and instruct the user in operating the system.

This includes all components installed as accessories, e.g. remote control units. In addition, the system installer must make the user aware of the required maintenance work.

DHW hygiene

For optimum DHW hygiene, avoid DHW temperatures that are < 50 °C. For larger systems and systems with low water exchange, the temperature should not drop below < 60 °C.

Inform the system user what DHW temperatures should be set and the risks associated with having a raised outlet temperature at the draw-off points.

Calling up parameters

Note
The display and setting of some parameters is dependent on:
- *Heat generator*
- *Connected accessories and the functions associated with them*

Tap the following buttons:

1. ≡ and **OK** simultaneously for approx. 4 s, then release.
2. Use ∧/∨ to select **"b.2"** for system configuration.
3. **OK**
4. Use ∧/∨ to select the parameter for adjustment. See tables below.
5. **OK**
6. ∧/∨ for the required value.
7. **OK**

Note
Further parameters can be called up via the software tool.

Parameter

Note
*Parameter values in **bold** are factory settings.*

1 Set flow temperature for external demand

Setting		Explanations
		Set flow temperature for external demand
	70	Set flow temperature in the delivered condition 70 °C
	20 to 82	Set flow temperature adjustable from 20 to 82 °C in 1 °C increments

2 Primary pump operating mode

Setting		Explanations
	1	"Automatic" Switched on regardless of current temperature level
	7	Switched off in reduced mode (in conjunction with constant operation with time program) or if there is no demand via the room thermostat.

Parameter (cont.)

3 Scald protection

Setting		Explanations
		The adjustable DHW temperature is limited to a maximum value.
Out	0	Scald protection OFF **Danger** Risk of injury due to increased DHW temperature. Inform the system user of the risk from the raised outlet temperature at the draw-off points.
In	**1**	Scald protection on (max. DHW temperature 60 °C) ***Note*** *Even with the scald protection switched on, higher outlet temperatures may occur at the draw-off points in the following cases:* ▪ *While the appliance is being calibrated*

4 Max. speed of speed-controlled primary/heating circuit pump in standard mode, heating circuit 1

Setting		Explanations
		Maximum speed of the internal circulation pump in heating mode with standard room temperature
	...	Delivered condition specified by settings specific to the heat generator
	0 to 100	Maximum speed adjustable from 0 to 100 %

5 Screed drying

Setting		Explanations
Not active	**0**	Screed drying can be set in accordance with selectable temperature/time profiles. For individual profile curves, see chapter "Function description".
Temperature profile A	2	
Temperature profile B	3	
Temperature profile C	4	
Temperature profile D	5	
Temperature profile E	6	
Temperature profile F	7	

6 Minimum heating output

Setting		Explanations
		A limit can be set on the minimum heating output for heating mode.
	...	Delivered condition specified by settings specific to the appliance
	0 to 100	Adjustable from 0 to 100 %

Parameter (cont.)

7 Maximum heating output

Setting		Explanations
		A limit can be set on the maximum heating output for heating mode.
	100	Heating output in the delivered condition 100 %
	0 to 100	Adjustable from 0 to 100 %

8 Maximum flow temperature limit, heating circuit 1

Setting		Explanations
		Maximum flow temperature limit for the heating circuit
74 °C	**74**	Maximum limit in the delivered condition 74 °C
	10 to 100	Setting range limited by heat generator-specific parameters

9 Operating mode, heating circuit 1

Setting		Explanations
		Only adjust if there is just a single heating circuit in the system.
	4	Weather-compensated without room temperature influence
	7	Weather-compensated with room temperature influence: See also parameter 10.

10 "Room influence factor, heating circuit 1"

Setting		Explanations
		The higher the value, the greater the influence of the room temperature on the flow temperature of the heating circuit (heating curve). Operation with room temperature hook-up must be set for the heating circuit. Only change the value for systems with one heating circuit. For a sample calculation, see chapter "Heating curve" in the "Function description"
8	**8**	Maximum limit in the delivered condition
	0 to 64	Setting range

11 Maximum flow temperature limit, heating circuit 2

Setting		Explanations
		Maximum flow temperature limit for the heating circuit
74 °C	**74**	Maximum limit in the delivered condition 74 °C
	10 to 100	Setting range limited by heat generator-specific parameters

12 Operating mode heating circuit 2

Setting		Explanations
		Heating mode:
Weather-compensated without room temperature hook-up	**4**	Weather-compensated **without** room temperature influence
Weather-compensated with room temperature hook-up	7	Weather-compensated **with** room temperature influence See parameter 13.

Parameter (cont.)

13 Room influence factor, heating circuit 2

Setting		Explanations
		The higher the value, the greater the influence of the room temperature on the flow temperature of the heating circuit (heating curve). Operation "with room temperature hook-up" must be set for the heating circuit. Only change the value for the heating circuit with mixer. For a sample calculation, see chapter "Heating curve" in the "Function description" ***Note*** *With the combi boiler (B1KF), DHW heating is not possible during screed drying. With the system boiler (B1HF with diverter valve) or storage combi boiler (B1LF, B1TF, B1SF and B1UF), DHW heating is suspended after 30 minutes for an hour (parameter 1087.1) in order to run the screed drying program.*
	8	Maximum limit in the delivered condition
	0 to 64	Setting range

Further settings

Only possible via ViGuide.

1667.0 Pump control, heating circuit pump 1 in standby mode

Setting		Explanations
		Operating mode, heating circuit pump 1
	0	In "standby mode" = permanently switched off
	1 to 24	In "standby mode" = switched on 1–24 times a day (in constant mode for 10 minutes each time; in weather-compensated mode for 50 min each time)

1668.0 Pump control, heating circuit pump 2 in standby mode

Setting		Explanations
		Operating mode, heating circuit pump 2
	0	In "standby mode" = permanently switched off
	1 to 24	In "standby mode" = switched on 1–24 times a day (in constant mode for 10 minutes each time; in weather-compensated mode for 50 min each time)

2426.1 Weather-compensated heating circuit pump logic for heating circuit 1 (only for weather-compensated control units).

Setting		Explanations
		If the outside temperature is above the threshold value (selected set room temperature plus hysteresis in K), the heating circuit pump is switched off. If the outside temperature is below the threshold value (selected set room temperature plus hysteresis in K), the heating circuit pump is switched on.

Parameter (cont.)

2426.3 Room temperature-dependent heating circuit pump logic for heating circuit 1 (only for weather-compensated control units with room temperature hook-up).

Setting		Explanations
Only activate this function for the heating circuit with mixer or if there is only one direct heating circuit in the system.		If the actual room temperature is above the threshold value (selected set room temperature plus hysteresis in K), the heating circuit pump is switched off. If the actual room temperature is below the threshold value (selected set room temperature plus hysteresis in K), the heating circuit pump is switched on.

2427.1 Weather-compensated heating circuit pump logic for heating circuit 2 (only for weather-compensated control units).

Setting		Explanations
		If the outside temperature is above the threshold value (the selected set room temperature plus the hysteresis in K), the heating circuit pump is switched off. If the outside temperature is below the threshold value (selected set room temperature plus hysteresis in K), the heating circuit pump is switched on.

2427.3 Room temperature-dependent heating circuit pump logic for heating circuit 2 (only for weather-compensated control units with room temperature hook-up).

Setting		Explanations
Only activate this function for the heating circuit with mixer or if there is only one direct heating circuit in the system.		If the actual room temperature is above the threshold value (selected set room temperature plus hysteresis in K), the heating circuit pump is switched off. If the actual room temperature is below the threshold value (selected set room temperature plus hysteresis in K), the heating circuit pump is switched on.

Subscriber numbers of connected extensions

All extensions connected to the heat generator (except the SDIO/SM1A electronics module) must have a subscriber number. The subscriber number is set on rotary switch S1 at each extension.
Observe maximum number of PlusBus subscribers, see note in chapter "Connection".

Subscriber numbers of connected extensions (cont.)

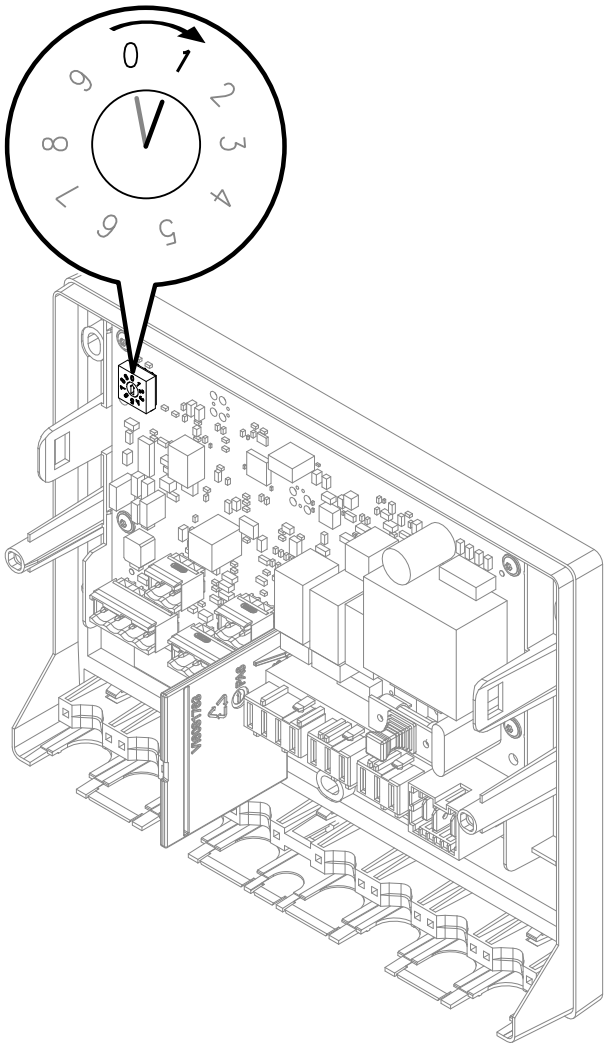

Fig. 42

Rotary switch S1 settings:
- EM-S1 extension (system with solar collectors): **0**
- EM-EA1 extension (max. 1 extensions in one system)
  Note
  On the EM-EA1 extension, select 1 if the "External heating circuit hook-up" function is being set for more than one heating circuit.
- EM-P1 extension
  - If no heating circuits with mixer are available in the system: **1**
  - If heating circuits with mixer (EM-M1 or EM-MX extensions) are present in the system: Always set subscriber number for EM-P1 extension to the consecutive number after EM-M1 or EM-MX extensions.
- EM-M1 or EM-MX extensions
  - Heating circuit 2 with mixer: Rotary switch on extension kit to 1

Note
*EM-EA1 extensions may have the same subscriber number as the EM-P1, EM-M1 or EM-MX extensions. The following table shows an **example** of how a system may be equipped.*

Function	Electronics module	Extension	Setting Rotary switch S1
System with solar collectors	ADIO	EM-S1	**0**
Heating circuit 2 with mixer	ADIO	EM-M1/EM-MX	**1**
Heating circuit 1 without mixer or DHW circulation pump (circulation pump downstream of low loss header)	ADIO	EM-P1	**2**
Function extensions (e.g.): ▪ Fault message input ▪ Fault message output ▪ Operating mode changeover ▪ External heating circuit hook-up (for more than one heating circuit)	DIO	EM-EA1	**1**

Note
A maximum of one Vitotrol 200-E can be connected
Solar module not compatible with all appliance versions.

Service menu

Calling up the service menu

Tap the following buttons:

1. ≡ and **OK** simultaneously for approx. 4 s, then release.

2. Select the required menu section (e.g. **"b.1"** Connect with software tool).

   Note
   Not all menu areas will be available, depending on the system equipment level.

Note
Tap "≡" to return to the service menu.

Service menu overview

Service			
Er Active messages			
b.1 Connect with software tool			
b.2 System configuration			
b.3 Diagnostics			
	d.1 Outside temperature		
	d.2 Heat generator flow temperature		
	d.3 Primary circuit pump speed %		
	d.4 Flue gas temperature		
	d.5 Burner hours run		
	d.6 Burner output		
	d.7 3-way valve position		
		0 = Heating	
		1 = Middle position (if installed)	
		2 = DHW	
	d.8 Serial number of heat generator		
	d.9 Heating circuit 1 flow temperature		
	d.10 Heating circuit 2 flow temperature		
	d.11 DHW temperature		
b.4 Message history			
b.5 Commissioning assistant			
b.6 Start upper/lower heating output for trade fair mode			
b.7 Configure the maintenance interval			
b.8 Reset the maintenance interval			

Exiting the service menu

Tap the following buttons:

"≡" and **"OK"** simultaneously for 4 s.

Note
The system exits the service menu automatically after 30 min.

Diagnosis

Checking operating data

Operating data can be checked in various areas. See **"Diagnosis"** in the service menu overview.
Operating data on heating circuits with mixer can only be called up if such components are installed in the system.

Note
*If a called up sensor is faulty, **"- - -"** appears on the display.*

Calling up operating data

Tap the following buttons:

1. ≡ and **OK** simultaneously for approx. 4 s, then release.
2. Use ∧/∨ to select **"b.3"** for diagnostics.
3. **OK**
4. Use ∧/∨ to select the required entry.

   Note
   Use ∧/∨ to view "d.8" serial number of heat generator in sections.
5. **OK**

b.7: Configuring the maintenance interval

Tap the following buttons:

1. ≡ and **OK** simultaneously for approx. 4 s, then release.
2. Use ∧/∨ to select **"b.7"** for configuring the maintenance interval.
3. **OK**
4. Use ∧/∨ to set the required value:
   0 = maintenance interval off
   1 = maintenance interval 3 months
   2 = maintenance interval 6 months
   3 = maintenance interval 12 months
   4 = maintenance interval 18 months
   5 = maintenance interval 24 months
5. **OK**

b.8: Resetting the maintenance interval

Tap the following buttons:

1. ≡ and **OK** simultaneously for approx. 4 s, then release.
2. Use ∧/∨ to select **"b.8"** for resetting the maintenance interval.
3. **OK**
4. Use ∧/∨ to set the required value:
   - NO
   - YES
5. **OK**

Fault display on the programming unit

The display shows "⚠" in the event of a fault.

Note
If a central fault message facility is connected, this is switched on.

Calling up fault messages

Tap the following buttons:

1. ≡ and **OK** simultaneously for approx. 4 s, then release.
2. ∧/∨ for **"Er"** message list
3. **OK**
4. ∧/∨ to select fault entry **"E.1, E.2..."**.
5. **OK**
6. Fault code is displayed.

Acknowledging the fault display

Calling up the fault in the **"Er"** menu automatically acknowledges the fault display.

Calling up acknowledged fault messages

Tap the following buttons:

1. "≡"
2. ∧/∨ to select **"Er"**.
3. **OK**
4. ∧/∨ to call up fault entry **"E.1 to E.5"**.
5. **OK**
6. ∧/∨ to display the fault code.

Reading out fault messages from the fault memory (message history)

The 5 most recent faults (including those remedied) are saved and can be called up.
Faults are sorted by date.

Tap the following buttons:

1. ≡ and **OK** simultaneously for approx. 4 s, then release.
2. ∧/∨ for **"b.4"** message history
3. **OK**
4. Use ∧/∨ to select fault entry **"E.1, E.2... or E. 5"**.
   For messages, see chapter "Further messages".
5. **OK**
6. ∧/∨ for the required message
7. **OK**

Overview of electronics modules

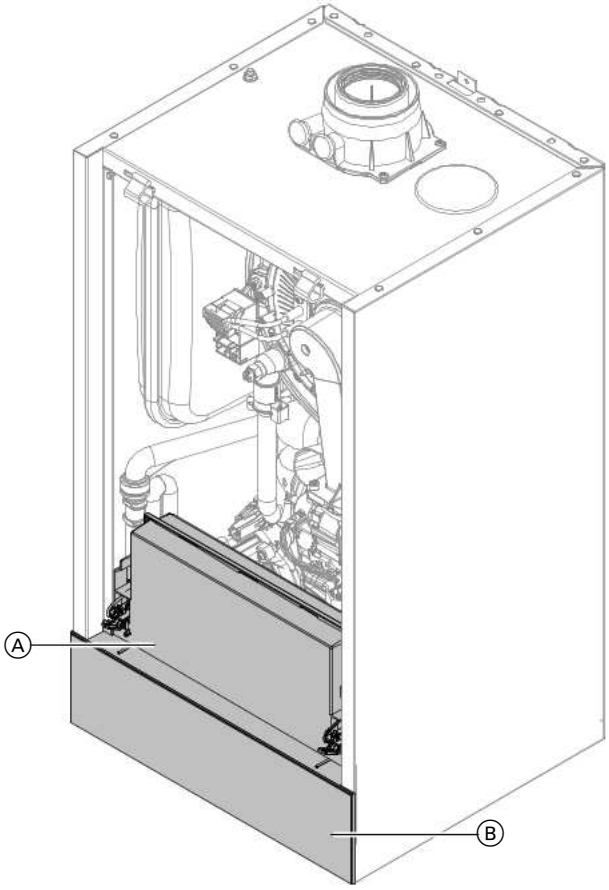

Fig. 43

Ⓐ HBMU heat management unit
Ⓑ HMI programming unit with TCU communication module

Resetting the burner

The display shows [L and ▲ flashes.
The burner is locked due to a fault.
Reset the burner:

Note
The burner fault display can be closed by pressing ≡ for 4 s. The fault can be opened later by tapping ∧ ∨ simultaneously.
A reset is only possible after the burner has cooled down.

Tap the following buttons:

1. ∧ / ∨ to display the fault number.
2. ∧ and ∨ simultaneously for approx. 4 s.
   A rotating bar appears on the display. The reset process has started.
   If the fault no longer exists, the home screen will appear.

Fault messages

Note
For diagnostics and troubleshooting, see chapter "Repairs".
Fault messages dependent on appliance equipment level

Displayed fault code	System characteristics	Cause	Measures
7	No DHW heating	Lead break, cylinder temperature sensor	▪ Check DHW setting in the commissioning assistant and correct if necessary. ▪ Check the cylinder temperature sensor (terminal 2). ▪ Measure voltage at sensor input on HBMU heat management unit. Set value: 3.3 V⎓ with sensor disconnected. Replace faulty component if necessary.
8	No DHW heating	Short circuit, cylinder temperature sensor	Check the cylinder temperature sensor (terminal 2). Replace faulty component if required.
11	No solar DHW heating or central heating backup	Lead break, collector temperature sensor	▪ Check collector temperature sensor. ▪ Measure voltage at sensor input on electronics module (ADIO). Set value: 3.3 V⎓ with sensor disconnected.
12	No solar DHW heating	Short circuit, collector temperature sensor	▪ Check collector temperature sensor. ▪ Measure voltage at sensor input on electronics module (ADIO). Set value: 3.3 V⎓ with sensor disconnected.
13	Controls as if the outside temperature were 0 °C	Lead break, outside temperature sensor	▪ Check operating mode setting in commissioning assistant and remedy if necessary. ▪ Check outside temperature sensor and connection to sensor (terminal 4). ▪ Measure voltage at sensor input on HBMU heat management unit. Set value: 3.3 V⎓ with sensor disconnected. Replace faulty component if required.
14	Regulates as if the outside temperature were 0 °C.	Short circuit, outside temperature sensor	Check outside temperature sensor and connection to sensor (terminal 4). Replace faulty components if necessary.
15	No solar DHW heating	Lead break, solar cylinder temperature sensor (bottom)	Check cylinder temperature sensor. Measure voltage at sensor input on ADIO electronics module. Set value: 3.3 V⎓ with sensor disconnected.

Fault messages (cont.)

Displayed fault code	System characteristics	Cause	Measures
16	No solar DHW heating	Short circuit, solar cylinder temperature sensor (bottom)	Check cylinder temperature sensor. Measure voltage at sensor input on ADIO electronics module. Set value: 3.3 V⎓ with sensor disconnected.
29	Regulates without flow temperature sensor for low loss header.	Lead break, low loss header sensor	▪ Check commissioning assistant setting, low loss header. ▪ Check flow temperature sensor, low loss header. ▪ Measure voltage at sensor input on electronics module. Set value: 3.3 V⎓ with sensor disconnected.
30	Regulates without flow temperature sensor for low loss header.	Short circuit, low loss header sensor	Check flow temperature sensor, low loss header. Measure voltage at sensor input on electronics module. Set value: 3.3 V⎓ with sensor disconnected
49	Burner in a fault state	Lead break, flue gas temperature sensor	Check flue gas temperature sensor. Reset the appliance.
50	Burner in a fault state	Short circuit, flue gas temperature sensor	Check flue gas temperature sensor. Reset the appliance.
57	Normal operation without room influence	Lead break, room temperature sensor	▪ Check commissioning setting of remote control. ▪ Check plug and cable of external room temperature sensor, heating circuit. ▪ If no external room temperature sensor installed, replace Vitotrol programming unit.
58	Normal operation without room influence	Short circuit, room temperature sensor	Check plug and cable of external room temperature sensor, heating circuit. If no external room temperature sensor installed, replace Vitotrol programming unit.
59	Burner locked out, boiler circuit pump off. No central heating, no DHW heating.	Power supply, undervoltage	Check mains voltage. If voltage is correct and the fault occurs repeatedly, replace the fan unit.
62	Burner in a fault state	High limit safety cut-out has responded.	▪ Check heating system fill level. ▪ Check pre-charge pressure in diaphragm expansion vessel. Adjust to required system pressure. ▪ Check whether flow rate is sufficient (circulation pump). ▪ Check function of 3-way diverter valve. Vent the system. Reset the appliance.

Fault messages (cont.)

Displayed fault code	System characteristics	Cause	Measures
63	Burner in a fault state	Flue gas temperature limiter has responded.	▪ Check heating system fill level. ▪ Check pre-charge pressure in diaphragm expansion vessel. Adjust to required system pressure. ▪ Check whether flow rate is sufficient (circulation pump). ▪ Check function of 3-way diverter valve. Vent the system. Reset the appliance once the flue system has cooled down.
64	Normal operation; burner restarts.	Flame loss during stabilisation or operating phase	▪ Check gas supply (gas pressure and gas flow switch). ▪ Check balanced flue system for flue gas recirculation. ▪ Check ionisation electrode (replace if necessary). ▪ Check the distance of the electrode to the burner gauze assembly and its contamination level.
65	Burner in a fault state	Flame signal not present or insufficient at burner start	▪ Check gas supply (gas pressure and gas flow switch). ▪ Check gas solenoid valve. ▪ Check the system for condensate backup; check the condensate drain. ***Note*** *Prevent water damage.* ▪ Detach fan unit before removing the burner. Check ionisation electrode and connecting cable. Check the ignition. Connecting cables to ignition module and ignition electrode. Ignition electrode for distance and contamination: See also chapter "Checking and adjusting the ignition and ionisation electrodes". Check ignition electrode for broken insulation. Reset the appliance.
67	Burner in a fault state	Ionisation current lies outside the permissible range	Check gas supply (gas pressure and gas flow switch), check gas solenoid valve and inlet strainer. Check ionisation electrode for the following: ▪ Distance to burner gauze assembly. ▪ Check electrode/burner gauze assembly for contamination. If specified measures don't help, replace fan unit. Reset the appliance.

Fault messages (cont.)

Displayed fault code	System characteristics	Cause	Measures
68	Burner in a fault state	Flame signal is already present at burner start.	Close the gas shut-off valve. Remove connecting cable of the ionisation electrode. Reset the appliance. If the fault persists, replace the HBMU heat management unit: See chapter "Replacing the HBMU heat management unit".
69	Burner in a fault state	Ionisation current lies outside the permissible range	Check ionisation electrode for the following: ▪ Check whether insulation block is touching electrode ceramic. ▪ Check gas solenoid valve: In the service menu under "b.6", set the burner output to the lower heating output for approx. 4 min. If the fault occurs, replace the HBMU heat management unit. See chapter "Replacing the HBMU heat management unit". ▪ In the service menu under "b.6", switch the burner output from the lower to the upper heating output. If this fault occurs during modulation, check the intake screen for contamination. Replace the fan unit if necessary.
70	Burner in a fault state	HBMU heat management unit internal fault	Replacing the HBMU heat management unit: See chapter "Replacing the HBMU heat management unit".
71	Burner in a fault state	Fan speed too low	▪ Check fan for blockage. ▪ Check setting for gas type and flue system. Reset the appliance.
72	Burner in a fault state	Fan idle state not reached	▪ Reset the appliance. ▪ If the fault occurs repeatedly, replace the fan unit.
73	Burner in a fault state	Internal communication error	Reset the appliance. If the fault re-occurs, replace the HBMU heat management unit: See chapter "Replacing the HBMU heat management unit".
74	Burner locked out. Internal circulation pump off. No central heating and no DHW heating.	System pressure too low	Top up with water. Vent the system. If the fault occurs repeatedly: ▪ Check system pressure sensor with external pressure gauge. ▪ Check diaphragm expansion vessel pre-charge pressure. ▪ Check settings for set system pressure and range.

Fault messages (cont.)

Displayed fault code	System characteristics	Cause	Measures
75	System in a fault state	No flow rate	Top up with water. Vent the system. If the fault occurs repeatedly: ▪ Check/open the BDF valves. ▪ Check/replace the flow sensor (if installed). ▪ Check/replace the circulation pump.
77	Burner in a fault state	HBMU heat management unit data memory	Reset the appliance. If the fault re-occurs, replace the HBMU heat management unit: See chapter "Replacing the HBMU heat management unit".
78	Normal operation	No communication between heat management unit and programming unit	Check cables and plug-in connections between central control unit and programming unit. Check that the cables are correctly routed and positioned.
87	Burner locked out. Internal pump off. No central heating and no DHW heating.	System pressure too high	Check the system pressure and correct if necessary. Check precharge pressure of diaphragm expansion vessel. Check whether BDF valves are open. Check the system pressure sensor with an external pressure gauge.
89	No central heating and no DHW heating	Internal circulation pump blocked.	Check circulation pump. Replace if necessary.
91	Function of affected extension in emergency mode	DIO electronics module communication error	Check connections to DIO electronics module and connection to HBMU heat management unit.
92	Function of the relevant electronics module in emergency mode	ADIO electronics module communication error	▪ Check setting in the commissioning assistant and correct if required. ▪ Check connections and leads to the ADIO electronics module. ▪ Check PlusBus voltage level (24 to 28 V). ▪ Check subscriber number on rotary switch S1 and correct if required.
95	Burner not operational	OpenTherm remote control not connected	▪ Check connection to the OpenTherm remote control. unit. ▪ If OpenTherm is not required, set C.7 in the commissioning assistant to a value other than 14.
100	Electronics modules connected to PlusBus not functioning	PlusBus voltage error	Check whether the PlusBus power supply on the HBMU heat management unit is OK: Remove all connected PlusBus components and reconnect one by one. Check that no more than 1 Vitotrol 200-E is connected to the HBMU. Check whether there is a short circuit at the PlusBus cable.

Fault messages (cont.)

Displayed fault code	System characteristics	Cause	Measures
102	No internet connection	Error with communication module	Check cables and plug-in connections between heat management unit and communication module.
103	Normal operation	Internal communication error, programming unit	Check cables and plug-in connections between heat management unit and HMI programming unit.
104	Depending on configuration of EM-EA1 extension (DIO electronics module)	External fault message input active	Check connected external device.
142	Burner in a fault state	Communication restriction on CAN bus. INR.	Check the fan unit for correct function. For this, check the stepper motor of the fan unit (reference run with mains ON). If the fault persists, check the plug-in connections and cables of the CAN bus. Check further CAN bus subscribers. If fault occurs repeatedly, replace fan unit.
161	Burner in a fault state	HBMU heat management unit data memory access fault	Reset the appliance. If the fault re-occurs, replace the HBMU heat management unit: See chapter "Replacing the HBMU heat management unit".
162	Burner in a fault state	Processor low voltage	Reset the appliance. If the fault re-occurs, replace the HBMU heat management unit: See chapter "Replacing the HBMU heat management unit".
163	Burner in a fault state	Checksum error, data memory access, HBMU heat management unit	Reset the appliance. If the fault re-occurs, replace the HBMU heat management unit: See chapter "Replacing the HBMU heat management unit".
176	Burner in a fault state	Condensate backup in the heat cell	Remove condensate backup. Replace insulation blocks, electrodes and burner gauze assembly. ***Note*** *Remove the fan unit before opening the burner. Protect the PCB from water damage.*
182	No DHW heating	Short circuit, outlet temperature sensor (if installed)	Check outlet temperature sensor (plug X7, cores 3 and 4). Measure sensor input on HBMU heat management unit. Set value: 3.3 V⎓ with sensor disconnected.
183	No DHW heating	Lead break, outlet temperature sensor (if installed)	Check outlet temperature sensor (plug X7, cores 3 and 4).

Fault messages (cont.)

Displayed fault code	System characteristics	Cause	Measures
184	Burner in a fault state	Short circuit, flow temperature sensor/high limit safety cut-out	Check the flow temperature sensor/high limit safety cut-out. Check sensor lead. Replace faulty component if required. Reset the appliance.
185	Burner in a fault state	Lead break, flow temperature sensor/high limit safety cut-out	Check the flow temperature sensor/high limit safety cut-out. Replace faulty component if required. Reset the appliance.
299	Date/time wrong	Real-time clock fault	Check the date and time; amend if necessary.
345	Burner locked out, automatic enabling after appliance cool-down. Independent restart	Temperature limiter has responded.	▪ Ensure adequate heat transfer. ▪ Check heating system fill level. ▪ Check pre-charge pressure in diaphragm expansion vessel. Adjust to required system pressure. ▪ Check whether flow rate is sufficient (circulation pump). ▪ Check function of 3-way diverter valve. Vent the system. If the fault occurs during DHW heating: Check DHW cylinder or plate heat exchanger for contamination and scaling.
346	Burner in a fault state	Ionisation current calibration error	▪ Check the gas supply pressure. ▪ Check gas solenoid valve strainer on the inlet side for contamination. ▪ Check ionisation electrode for contamination. ▪ Check flue system. Remove flue gas recirculation if required. ▪ Check the condensate drain (condensate blockage). Reset the appliance.
347	Burner in a fault state	Flue gas recirculation	▪ Check the flue system for leaks; remedy if necessary. ▪ Check the flue system for flue gas back pressure, e.g. caused by an insufficient fall in the flue system, constrictions or blockages. Rectify if necessary. Reset the appliance.
348	Burner in a fault state	Gas modulation valve	If several heat generators are connected to a common flue system: Check whether **"Multiple connections"** is set in the commissioning assistant. Check the flue system for unrestricted flow. If fault remains, replace gas fan unit.

Fault messages (cont.)

Displayed fault code	System characteristics	Cause	Measures
349	Burner in a fault state	Air mass rate flow not detected correctly in fan unit.	▪ Check for dust contamination in the supply air. ▪ Check burner gauze assembly for contamination. Reset the appliance. If the fault occurs repeatedly, replace the gas fan unit.
350, 351	Burner in a fault state	Ionisation current lies outside the permissible range	Replace the HBMU heat management unit: See chapter "Replacing the HBMU heat management unit".
352	Burner in a fault state	Combustion CO limit exceeded	Check entire flue gas path for the following: ▪ Leaks ▪ Flue gas back pressure caused by water pocket (if flue system fall is insufficient). ▪ Constrictions ▪ Blockages Repair flue system if necessary. Reset the appliance.
353	Shutdown with restart if demand exists	Insufficient gas supply, burner output reduced	Check the gas supply. Optically check input-side screen in the gas solenoid valve for contamination. Reset the appliance.
354	Burner in a fault state	Gas modulation valve tolerance outside permissible range	Replace gas fan unit.
355	Burner in a fault state	Analogue signal reference check: Flame signal is already present at burner start	Replace the HBMU heat management unit: See chapter "Replacing the HBMU heat management unit".
357	Burner in a fault state	Insufficient gas supply	▪ Check that the main gas valve and the gas shut-off valve are open. ▪ Test static gas pressure and gas flow pressure. ▪ Check that on-site gas line and gas flow switch are correctly sized. ***Note*** *If the building pressure regulator has a leak, you may notice rising pressure when the burner is idle. When the system is restarted, the gas flow switch may trip.* ▪ If the static pressure does not drop, check the cable to the fan unit. Check that the coil resistance at the fuel valve is approx. 4 kΩ. ▪ Check the ignition electrode for damaged insulation. Reset the appliance.

▶▶

Fault messages (cont.)

Displayed fault code	System characteristics	Cause	Measures
359	Burner in a fault state	No ignition spark	▪ Check whether the ignition electrode insulation is damaged. ▪ Check for a voltage of 230 V~ at the ignition module during the ignition phase. If not, replace the HBMU heat management unit. ▪ If 230 V~ is present at the ignition module but there is still a fault, replace the ignition module. ▪ Check connection cables and leads from ignition module and ignition electrode. Reset the appliance.
361	Burner in a fault state	Flame signal is not present or insufficient at burner start.	Check ionisation electrode and connecting cable. Check plug-in connections for loose contacts. ***Note*** *Deposits on the electrodes indicate foreign bodies in the combustion air. Check the installation room and flue system for causes of the deposits, e.g. laundry detergents, cleaning agents, toiletries, deposits in the ventilation air supply (chimney).* Reset the appliance.
364	Burner in a fault state	Internal fault	Replace the HBMU heat management unit.
365	Burner in a fault state	Feedback from gas valve relay contact implausible (relay contact is "welded up").	Replace the HBMU heat management unit.
366, 367	Burner in a fault state	Gas valve electricity supply does not turn off.	Replacing the HBMU heat management unit: See chapter "Replacing the HBMU heat management unit".
368	Burner locked out	Gas pressure switch fault. Forced ventilation time expired.	▪ Check gas supply (gas pressure). ▪ If installed: Check gas pressure switch for correct function. If necessary, disconnect the gas pressure switch and check whether the burner starts.

Fault messages (cont.)

Displayed fault code	System characteristics	Cause	Measures
369	Burner in a fault state	Flame is lost immediately after flame formation (during safety time)	Check gas supply (gas pressure and gas flow switch). Check balanced flue system for flue gas recirculation. Check ionisation electrode for the following: ▪ Clearance to burner gauze assembly. ▪ Contamination on electrode. Reset the appliance.
370	Burner in a fault state	Gas valve or modulation valve will not close.	Reset the appliance. If fault occurs repeatedly, replace fan unit.
371	Burner in a fault state	Fan speed too low	Check the fan. Check the fan connecting cables. Check the fan power supply. Reset the appliance.
372	Burner in a fault state	Repeated flame loss during calibration	▪ Check ionisation electrode and connecting cable. ▪ Check plug-in connections for loose contacts. ▪ Check flue system. Remove flue gas recirculation if required. ▪ Check system for condensate backup. ▪ Visually inspect gas solenoid valve inlet and strainer on the inlet side for contamination. ***Note*** *To prevent water damage, detach fan unit before removing the burner. Deposits on the electrodes indicate foreign bodies in the combustion air.* Check the installation room and flue system for causes of the deposits, e.g. laundry detergents, cleaning agents, toiletries, deposits in the ventilation air supply (chimney). If burner gauze assembly and ionisation electrode have been replaced, also clean fan unit, gas/air channel and Venturi extension. Reset the appliance.
373	Burner in a fault state	Heat transfer too low during calibration Temperature limiter has shut down.	▪ Ensure adequate heat transfer. ▪ Check circulation pump for faults, scale or blockages. ▪ Check function of 3-way diverter valve. Vent the system. ▪ Check function of flow sensor. Reset the appliance.

▶▶

Fault messages (cont.)

Displayed fault code	System characteristics	Cause	Measures
374	Burner restarts.	Preparation for calibration of ionisation current: Stabilisation conditions for pre-calibration not met.	▪ Check ionisation electrode and connecting cable. ▪ Check plug-in connections for loose contacts. ▪ Check flue system; remove flue gas recirculation if necessary. ▪ Check system for condensate backup. ▪ Visually inspect gas solenoid valve inlet and inlet strainer for contamination. ***Note*** *To prevent water damage, detach fan unit before removing the burner.* *Deposits on the electrodes indicate foreign bodies in the combustion air. Check the installation room and flue system for causes of the deposits, e.g. laundry detergents, cleaning agents, toiletries, deposits in the ventilation air supply (chimney). If burner gauze assembly and ionisation electrode have been replaced, also clean fan unit, gas/air channel and Venturi extension.* Reset the appliance.

Fault messages (cont.)

Displayed fault code	System characteristics	Cause	Measures
375	Burner restarts.	Performing ionisation current calibration: Calibration not performed. Minimum value or termination criterion not reached.	▪ Check ionisation electrode and connecting cable. ▪ Check plug-in connections for loose contacts. ▪ Check flue system; remove flue gas recirculation if necessary. ▪ Check system for condensate backup. ▪ Visually inspect gas solenoid valve inlet and inlet strainer for contamination. ***Note*** *To prevent water damage, detach fan unit before removing the burner.* *Deposits on the electrodes indicate foreign bodies in the combustion air. Check the installation room and flue system for causes of the deposits, e.g. laundry detergents, cleaning agents, toiletries, deposits in the ventilation air supply (chimney). If burner gauze assembly and ionisation electrode have been replaced, also clean fan unit, gas/air channel and Venturi extension.* Reset the appliance.

Fault messages (cont.)

Displayed fault code	System characteristics	Cause	Measures
376	Burner restarts.	Ionisation current differential compared to previous value not plausible	▪ Check ionisation electrode and connecting cable. ▪ Check plug-in connections for loose contacts. ▪ Check flue system; remove flue gas recirculation if necessary. ▪ Check system for condensate backup. ▪ Visually inspect gas solenoid valve inlet and inlet strainer for contamination. ***Note*** *To prevent water damage, detach fan unit before removing the burner.* *Deposits on the electrodes indicate foreign bodies in the combustion air. Check the installation room and flue system for causes of the deposits, e.g. laundry detergents, cleaning agents, toiletries, deposits in the ventilation air supply (chimney). If burner gauze assembly and ionisation electrode have been replaced, also clean fan unit, gas/air channel and Venturi extension.* Reset the appliance.
377	Burner in a fault state	Post-processing of ionisation current calibration: Stabilisation conditions for post-calibration not met.	Check gas type setting. If the fault occurs repeatedly, replace the HBMU heat management unit. See chapter "Replacing the HBMU heat management unit". Reset the appliance.
378	Burner in a fault state	Flame loss during stabilisation or operating phase	▪ Check gas supply (gas pressure and gas flow switch). ▪ Check flue gas recirculation. ▪ Check for contamination of ionisation electrode and burner gauze assembly. Reset the appliance.
379	Burner in a fault state	Flame signal not present or insufficient	▪ Check ionisation electrode connecting cable for damage and firm seating. ▪ Check ionisation electrode, replace if necessary. Reset the appliance.

Fault messages (cont.)

Displayed fault code	System characteristics	Cause	Measures
380	Burner in a fault state	Flame is lost immediately after flame formation (during safety time)	Check gas supply (gas pressure and gas flow switch). Check balanced flue system for flue gas recirculation. Check ionisation electrode, burner gauze assembly: ▪ Distance to burner gauze assembly. ▪ Contamination on electrode. Reset the appliance.
381	Burner in a fault state	Flame loss during operating phase	Check gas supply (gas pressure and gas flow switch). Check balanced flue system for flue gas recirculation. Check ionisation electrode, burner gauze assembly: ▪ Clearance to burner gauze assembly. ▪ Contamination on electrode. Reset the appliance.
382	Burner in a fault state	Fault counter has exceeded limit.	Reset the appliance. Work through fault analysis using fault history.
383, 384	Burner in a fault state	Possible contamination of gas line	▪ Check gas line for contamination. ▪ Check the gas supply pressure. ▪ Replace gas fan if required. Reset the appliance.
385	Burner in a fault state	Short circuit, signal 1, ionisation current HBMU heat management unit faulty.	Check IO electrode for earth fault. If the fault persists, replace the HBMU heat management unit. Reset the appliance.
386	Burner in a fault state	HBMU heat management unit faulty.	Replace the HBMU heat management unit: See chapter "Replacing the HBMU heat management unit". Reset the appliance.
387	Burner in a fault state	Earth fault, ionisation current. HBMU heat management unit faulty.	Check ionisation electrode and connecting cable. If the fault persists, replace the HBMU heat management unit: See chapter "Replacing the HBMU heat management unit". Reset the appliance.
388	Burner in a fault state	HBMU heat management unit faulty.	Replace the HBMU heat management unit: See chapter "Replacing the HBMU heat management unit". Reset the appliance.
393	Burner in a fault state	Short circuit, second flue gas temperature sensor.	Check sensor and leads to sensor. Replace the sensor if necessary. Reset the appliance.
394	Burner in a fault state	Lead break, second flue gas temperature sensor.	Check sensor and leads to sensor. Replace the sensor if necessary. Reset the appliance.

Fault messages (cont.)

Displayed fault code	System characteristics	Cause	Measures
395	Burner in a fault state	IO electrode earth fault, HBMU heat management unit faulty.	Check ignition electrode for earth fault. If the fault persists, replace the HBMU heat management unit. Reset the appliance.
396	Burner in a fault state	HBMU heat management unit faulty.	Replace the HBMU heat management unit: See chapter "Replacing the HBMU heat management unit". Reset the appliance.
399	Burner in a fault state	IO electrode earth fault, HBMU heat management unit faulty.	Check IO electrode for earth fault. If the fault persists, replace the HBMU heat management unit: See chapter "Replacing the HBMU heat management unit". Reset the appliance.
400	Burner in a fault state	HBMU heat management unit faulty.	Replace the HBMU heat management unit: See chapter "Replacing the HBMU heat management unit". Reset the appliance.
401	Burner in a fault state	IO electrode earth fault, HBMU heat management unit faulty	Check IO electrode for earth fault. If the fault persists, replace the HBMU heat management unit: See chapter "Replacing the HBMU heat management unit". Reset the appliance.
402	Burner in a fault state	HBMU heat management unit faulty	Replace the HBMU heat management unit: See chapter "Replacing the HBMU heat management unit". Reset the appliance.
403	Burner in a fault state	Ionisation electrode earth fault, HBMU heat management unit faulty	Check IO electrode for earth fault. If the fault persists, replace the HBMU heat management unit: See chapter "Replacing the HBMU heat management unit". Reset the appliance.
404	Burner in a fault state	HBMU heat management unit faulty	Replace the HBMU heat management unit: See chapter "Replacing the HBMU heat management unit". Reset the appliance.
405	Burner in a fault state	Ionisation electrode earth fault, HBMU heat management unit faulty	Check IO electrode for earth fault. If the fault persists, replace the HBMU heat management unit: See chapter "Replacing the HBMU heat management unit". Reset the appliance.
406, 408, 410	Burner in a fault state	HBMU heat management unit faulty	Replace the HBMU heat management unit: See chapter "Replacing the HBMU heat management unit". Reset the appliance.
416	Burner locked out	Flue gas temperature sensor incorrectly positioned	Fit flue gas temperature sensor correctly. See "Repairs". Carry out mains reset after fault has been remedied.

Fault messages (cont.)

Displayed fault code	System characteristics	Cause	Measures
417, 418	Burner in a fault state	HBMU heat management unit faulty	Replace the HBMU heat management unit: See chapter "Replacing the HBMU heat management unit". Reset the appliance.
425	System in control mode, calculation out of operation. Calculation values can be viewed via software tool.	Time synchronisation failed.	Set the time.
446	Burner in a fault state	Deviation, heat generator flow temperature sensor/ high limit safety cut-out	Check the flow temperature sensor/high limit safety cut-out. Check plug-in connection and lead to sensor. Reset the appliance.
447, 448	Burner in a fault state	Deviation, ionisation voltage/ionisation current signal.	Replace the HBMU heat management unit: See chapter "Replacing the HBMU heat management unit". Reset the appliance.
449, 451, 452	Burner in a fault state	Error in scheduled program run monitoring	Reset the appliance. If this occurs repeatedly, replace the HBMU heat management unit: See chapter "Replacing the HBMU heat management unit".
453	Burner in a fault state	Synchronisation error, sequence	Reset the appliance. If this occurs repeatedly, replace the HBMU heat management unit: See chapter "Replacing the HBMU heat management unit".
454	Burner in a fault state	Incorrect parameter set of HBMU heat management unit.	Flash correct HBMU heat management unit parameter set.
455, 456	Burner in a fault state	Error in program run monitoring	Reset the appliance. If this occurs repeatedly, replace the HBMU heat management unit: See chapter "Replacing the HBMU heat management unit".
457	Burner in a fault state	Fan sluggish or blocked.	Reset the appliance. Check fan for sluggishness. In the case of severe contamination or grinding noises, replace fan unit.
458	Burner in a fault state	Faulty reset sequence	Check connecting cable between HBMU heat management unit and HMI programming unit. Reset the appliance.
461	Burner in a fault state	Flue gas damper fault	Check flue gas damper.
462	Burner in a fault state	Feedback input of the external gas safety valve causes the burner start to be aborted.	Check the external gas safety valve and connection

Fault messages (cont.)

Displayed fault code	System characteristics	Cause	Measures
463	Burner in a fault state	Contaminated combustion air, flue gas recirculation	Check flue system for contamination and flue gas recirculation. Clean flue system if required. Reset the burner. ***Note*** *Deposits on the electrodes indicate foreign bodies in the combustion air. Check the installation room and flue system for causes of the deposits, e.g. laundry detergents, cleaning agents, toiletries, deposits in the ventilation air supply (chimney).* *If burner gauze assembly and ionisation electrode have been replaced, also clean fan unit, gas/air channel and Venturi extension.* *Reset the appliance.*
464	Burner in a fault state	Ionisation current too low during calibration. Differential compared to previous value not plausible.	▪ Check ionisation electrode and connecting cable. Check plug-in connections for loose contacts. ▪ Check whether there is a lot of dust in the ventilation air (e.g. from construction work). ▪ Check flue system. Remove flue gas recirculation if required. ▪ Check system for condensate backup. Reset the appliance. ***Note*** *To prevent water damage, detach fan unit before removing the burner.* If the fault is constant, replace the HBMU heat management unit: See chapter "Replacing the HBMU heat management unit". ***Note*** *Deposits on the electrodes indicate foreign bodies in the combustion air. Check the installation room and flue system for causes of the deposits, e.g. laundry detergents, cleaning agents, toiletries, deposits in the ventilation air supply (chimney).* *If burner gauze assembly and ionisation electrode have been replaced, also clean fan unit, gas/air channel and Venturi extension.*

Fault messages (cont.)

Displayed fault code	System characteristics	Cause	Measures
467	Burner in a fault state	Gas supply insufficient during calibration. Contaminated or insufficiently sized gas line.	▪ Test static gas pressure and gas flow pressure. ▪ Check that on-site gas line and gas flow switch are correctly sized. ▪ Visually inspect gas solenoid valve inlet and strainer on the inlet side for contamination. Reset the appliance. ***Note*** *Contamination, for example from a brazed gas line, can block up the gas solenoid valve strainer on the inlet side.*
468	Burner in a fault state	Ionisation current too high during calibration	Check gap between ionisation electrode and burner gauze assembly. Check whether there is a lot of dust in the ventilation air (e.g. from construction work). Reset the appliance. ***Note*** *Deposits on the electrodes indicate foreign bodies in the ventilation air. Check the installation room and flue system for causes of the deposits, e.g. laundry detergents, cleaning agents, toiletries, deposits in the ventilation air supply (chimney).* *If burner gauze assembly and ionisation electrode have been replaced, also clean fan unit, gas/air channel and Venturi extension.*
471	No heat demand.	System pressure sensor not available, lead break or short circuit.	▪ Check system pressure sensor (plug 163). ▪ Check lead and plug-in connection. ▪ Check whether the supply voltage to the sensor is 5 V⎓.
474	Burner in a fault state	Error in scheduled program run monitoring	Reset the appliance. If the fault re-occurs, replace the HBMU heat management unit: See chapter "Replacing the HBMU heat management unit".
517	Normal operation, remote control not functioning	Lead break, PlusBus cable, incorrect appliance address set, remote control faulty	▪ Check setting in the commissioning assistant and correct as necessary. ▪ Check remote control cable. ▪ Check remote control subscriber number. Replace faulty remote control if applicable.

Fault messages (cont.)

Displayed fault code	System characteristics	Cause	Measures
527, 528	Burner in a fault state	Incorrect HBMU heat management unit parameter set	Overwrite (flash) the HBMU heat management unit with the correct parameter set.
540	Burner in a fault state	Condensate backup in the heat cell	▪ Check system for condensate backup. ▪ Check the condensate drain and trap. ▪ Replace insulation blocks, electrodes and burner gauze assembly if required. ***Note*** *To prevent water damage, detach fan unit before removing the burner.* Reset the appliance.
544	Emergency function operating mode is activated for heating circuit 2: Mixer closes. Heating circuit pump is operational.	Lead break, flow temperature sensor, heating circuit 2 with mixer. Incorrect setting during commissioning.	Check flow temperature sensor, mixer 2. Measure voltage at sensor input on electronics module. Set value: 3.3 V⎓ with sensor disconnected. Check setting in the commissioning assistant and correct if required. Checking setting of ADIO rotary switch.
545	Emergency function operating mode is activated for heating circuit 2: Mixer closes. Heating circuit pump is operational.	Short circuit, flow temperature sensor, heating circuit 2 with mixer.	Check flow temperature sensor, mixer 2. Measure voltage at sensor input on electronics module. Set value: 3.3 V⎓ with sensor disconnected
574	Normal operation without room influence.	Room temperature sensor, heating circuit 1 not available.	Check external room temperature sensor for heating circuit or room temperature sensor on remote control unit.
575	Normal operation without room influence	Lead break, room temperature sensor, heating circuit 1.	Check external room temperature sensor for heating circuit or room temperature sensor on remote control unit.
576	Normal operation without room influence	Short circuit, room temperature sensor, heating circuit 1.	Check external room temperature sensor for heating circuit or room temperature sensor on remote control unit.
577	Normal operation without room influence	Room temperature sensor, heating circuit 2 not available	Check external room temperature sensor for heating circuit or room temperature sensor on remote control unit.
578	Normal operation without room influence	Lead break, room temperature sensor, heating circuit 2.	Check external room temperature sensor for heating circuit or room temperature sensor on remote control unit.

Fault messages (cont.)

Displayed fault code	System characteristics	Cause	Measures
579	Normal operation without room influence	Short circuit, room temperature sensor, heating circuit 1.	Check external room temperature sensor for heating circuit or room temperature sensor on remote control unit.
682	Burner in a fault state	Air mass flow rate sensor not available	Check air mass flow rate sensor.
683	Burner in a fault state	Air mass flow rate sensor faulty	Check air mass flow rate sensor.
684	Burner in a fault state	Back draught safety device faulty	Check back draught safety device.
694	Burner in a fault state	Signal comparison, deviation, flue gas high limit safety cut-out	Check plug-in connection and lead to sensor. Check sensor. Replace sensor if necessary. Reset the appliance.
738	Normal operation	OpenTherm remote control unit connected but not configured	Set C.7 in the commissioning assistant to a value of 14.
799	No DHW heating, no central heating	Central heating circuit pump reports an electrical fault. No flow rate.	Perform a power reset. If this occurs repeatedly, replace the heating circuit pump.
979	Constant heat demand. Set room temperature is exceeded.	Both inputs – plug 96 and OpenTherm – are occupied and reporting a heat demand.	***Note*** *Only one input can be used. Either plug 96 or OpenTherm.* Remove external devices or wire jumper from one of the inputs.

Fault messages (cont.)

Displayed fault code	System characteristics	Cause	Measures
980	No DHW heating	Minimum system pressure **before the start** of DHW heating is too low. Possible causes: ▪ Shut-off valve ▪ Too restricted ▪ Limescale build-up ▪ Sludge ▪ Incorrect hydraulic configuration ▪ Circulation pump faulty ▪ Air in heating circuit ▪ System pressure unstable or too low	▪ Check that the cylinder flow and return are open. ▪ Ensure that all quick-action air vent valves on the appliance side are permanently open. ▪ Run the entire venting program of the heating circuit again (select via service menu). Important: The quick-action air vent valve in the boiler circuit must be permanently open! ▪ Check the set hydraulic scheme and correct if necessary. ▪ Check the size and pre-charge pressure of the external diaphragm expansion vessel. ▪ Check the set system pressure (this fault is more likely if the system pressure is too low). ▪ Check the quick-action air vent valves for leaks and replace if necessary. ▪ Check the circulation pump and replace if necessary. ▪ The pause time for DHW heating can be terminated by a mains reset of the HMU heat management unit. Switch the appliance off and on again at the appliance switch.

Fault messages (cont.)

Displayed fault code	System characteristics	Cause	Measures
981	No DHW heating	Minimum system pressure is too low **during** DHW heating. Possible causes: ▪ Shut-off valve ▪ Too restricted ▪ Limescale build-up ▪ Sludge ▪ Incorrect hydraulic configuration ▪ Circulation pump faulty ▪ Air in heating circuit ▪ System pressure unstable or too low	▪ Check that the cylinder flow and return are open. ▪ Ensure that all quick-action air vent valves on the appliance side are permanently open. ▪ Run the entire venting program of the heating circuit again (select via service menu). Important: The quick-action air vent valve in the boiler circuit must be permanently open! ▪ Check the set hydraulic scheme and correct if necessary. ▪ Check the size and pre-charge pressure of the external diaphragm expansion vessel. ▪ Check the set system pressure (this fault is more likely if the system pressure is too low). ▪ Check the quick-action air vent valves for leaks and replace if necessary. ▪ Check the circulation pump and replace if necessary. ▪ The pause time for DHW heating can be terminated by a mains reset of the HMU heat management unit. Switch the appliance off and on again at the appliance switch.
982	No central heating, no DHW heating	Circulation pump heating circuit 1 running dry.	Check the DEV; check the circulation pump.

Status messages
The following messages can be displayed using the "ViGuide" software tool:

Message on the display	Meaning
S.9	Fan pre-purge for heating mode
S.29	Standard mode for heating
S.36	Comfort mode for DHW draw-off
S.60	Summer mode active (outside temperature economy function)
S.74	Heating suppression, heating
S.75	DHW circulation pump active
S.94	No demand, external hook-up, heating circuit 1
S.95	No demand, external hook-up, heating circuit 2
S.96	No demand, external hook-up, heating circuit 3
S.154	Due to insufficient heat transfer in heating system, burner operation not required

Repairs

! **Please note**
Residual water will escape when the boiler or one of the following components is fitted or removed:
- Water-filled pipework
- Heat exchanger
- Circulation pumps
- Plate heat exchanger
- Components fitted in the heating water or DHW circuit.

Water ingress can result in damage to other components.

Protect the following components against ingress of water:
- Control unit components (especially in the service position)
- Electrical components
- Plug-in connections
- Cables and leads

Shutting down the boiler

1. Turn off the power supply at the ON/OFF switch.
2. Shut off the gas supply.
3. If the boiler needs to be removed:
   - Isolate the system from the power supply, e.g. by removing the separate fuse or by means of a mains isolator, and check that it is no longer live.
   - Safeguard the system against reconnection.
   - Disconnect the balanced flue system.
   - Drain the boiler on the heating water and DHW sides.
   - Disconnect the on-site cables/leads.

Repairs (cont.)

Removing the boiler from the pre-plumbing jig or mounting frame

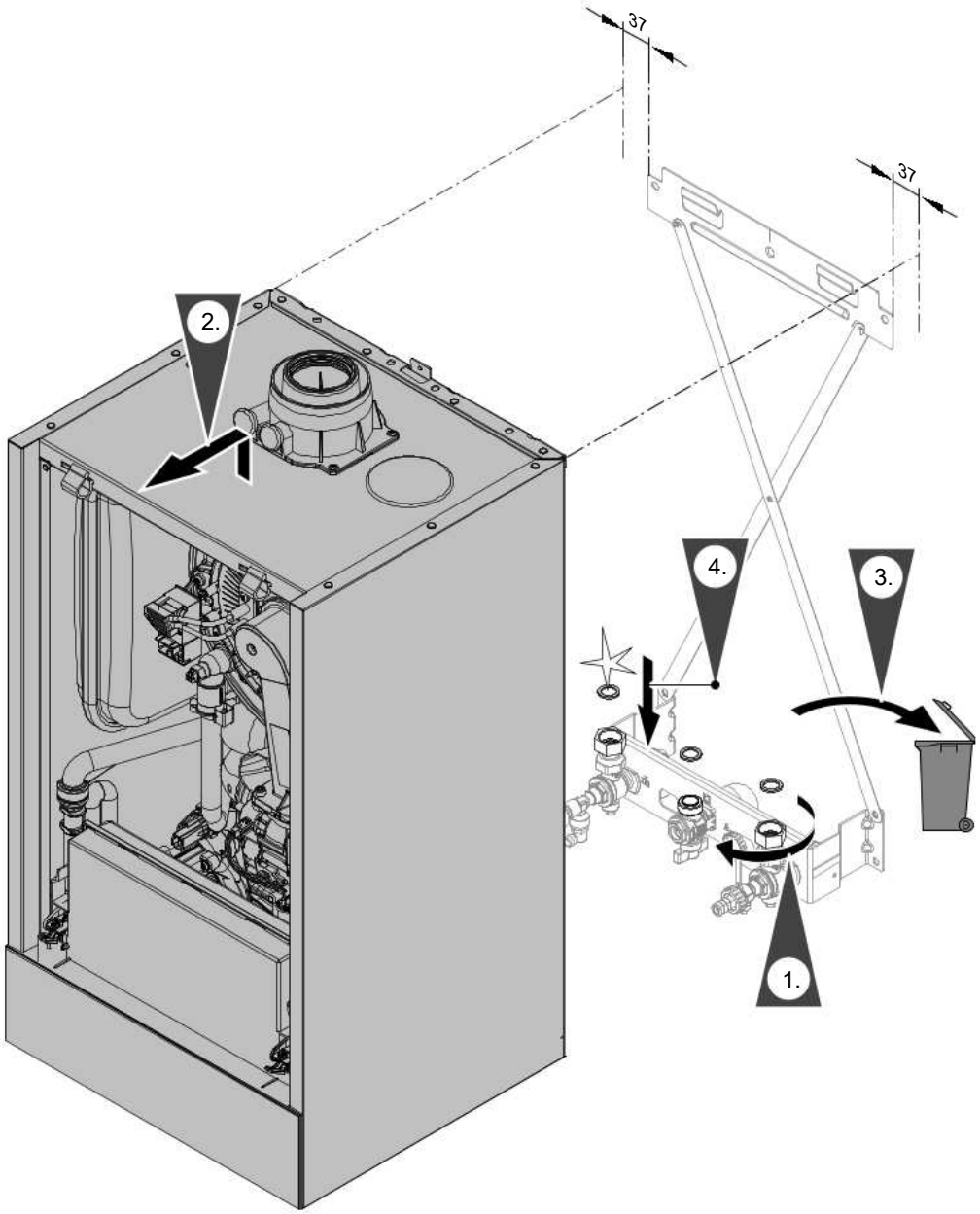

Fig. 44

Note
Use new gaskets and, if required, new locking ring connections when assembling.

Internal gasket diameter:
- *Gas connection Ø 18.5 mm*
- *Connections on the heating water side Ø 17.0 mm*

Gaskets and locking ring connections are available as spare parts (if required).

Note
When carrying out any work on gas connection fittings, hold with a suitable tool. Never transfer any forces to the internal components.

Danger
Escaping gas leads to a risk of explosion.
Check all connections on the gas side (also inside the appliance) for tightness.

Status/checking/diagnosing the internal circulation pump

The internal circulation pump is fitted with two status LEDs.

Repairs (cont.)

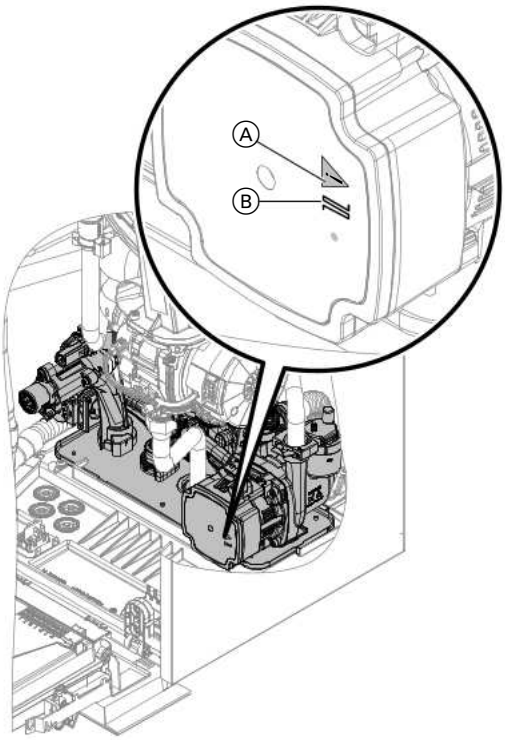

Fig. 45

- Ⓑ LED constant green:
  No communication (pump is running without external control from the boiler controller).
- Ⓑ LED flashing green:
  Pump is running with external control (PWM signal) from the boiler controller
- Ⓐ LED constant red:
  Pump failure

Note
The pump is controlled by a PWM signal. A lead break in the data line will not generate a fault message.
The pump is operating at 100 % of its maximum output.

Repairs (cont.)

Checking the temperature sensors

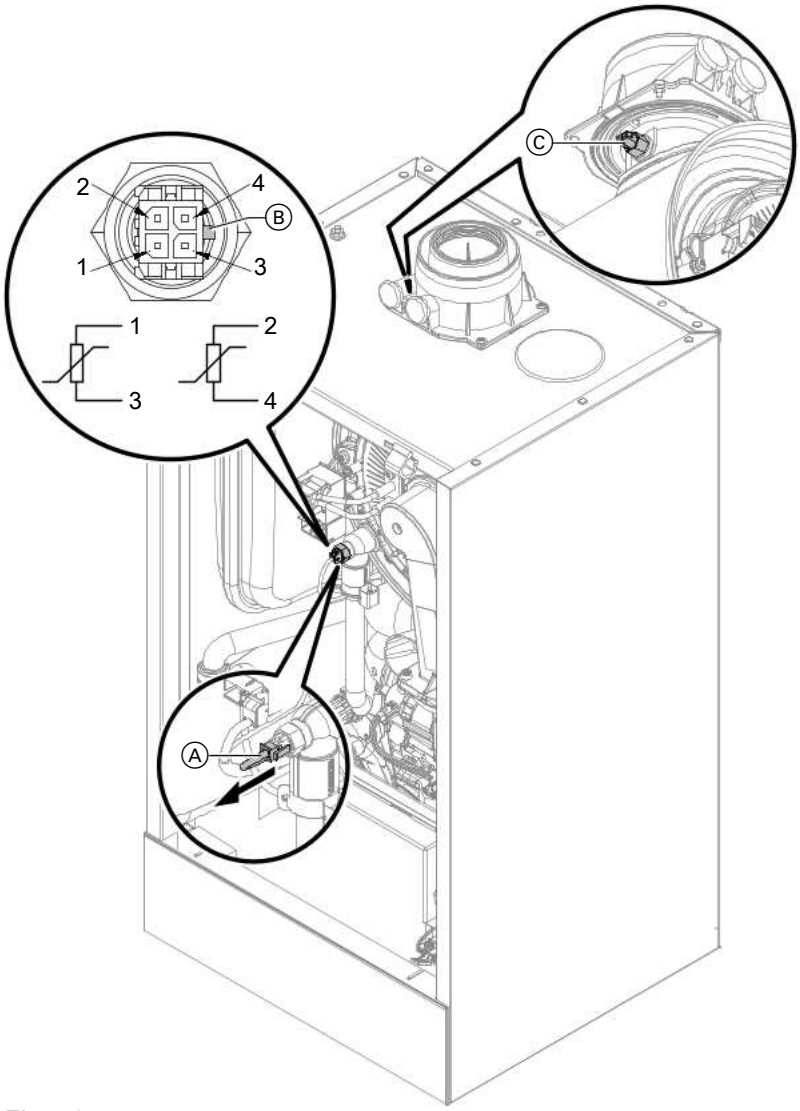

Fig. 46

Heat generator circuit flow temperature sensor (dual sensor)

1. Check the leads and plugs of flow temperature sensors Ⓐ.

2. Disconnect the leads from flow temperature sensors Ⓐ.

3. Check the sensor resistance. Note position of guide lug Ⓑ.
   - Sensor 1: Connections 1 and 3
   - Sensor 2: Connections 2 and 4

   Compare the resistances with the value for the current temperature from the following diagram. In the event of severe deviation (> 10 %), replace the dual sensor.

   ⚠ **Danger**
   The dual sensor is directly immersed in the heating water (risk of scalding).
   Drain the boiler on the heating water side before replacing the sensor.

   ⚠ **Danger**
   Risk of electric shock from escaping heating water.
   Check the dual sensor for leaks.

Diagnosis

6167586

Repairs (cont.)

Cylinder temperature sensor/outlet temperature sensor

1. Check lead and plug of the cylinder temperature sensor or outlet temperature sensor.
2. Disconnect wires of sensor plug.
3. Check the sensor resistance. Compare the resistance with the value for the current temperature from the following diagram.
   In the event of severe deviation (> 10 %), replace the sensor.

Low loss header sensor

1. Check lead and plug of temperature sensor [9] on the ADIO electronics module (mixer extension kit).
2. Disconnect wires of sensor plug.
3. Check the sensor resistance. Compare the resistance with the value for the current temperature from the following diagram.
   In the event of severe deviation (> 10 %), replace the sensor.

Outside temperature sensor

1. Check the lead and plug of the outside temperature sensor.
2. Disconnect wires 7 and 8 from terminal 4.
3. Check the sensor resistance. Compare the resistance with the value for the current temperature from the following diagram.
   If the results are very different from the curve (> 10 %), disconnect the wires from the sensor.
   Repeat the test directly on the sensor.
   Check the on-site lead. 2-core lead, length up to 35 m with a cross-section of 1.5 mm^2
   Depending on the test result, replace the lead or the outside temperature sensor.

Flue gas temperature sensor

1. Check the lead and plug of flue gas temperature sensor Ⓒ.
2. Disconnect leads, flue gas temperature sensor Ⓒ.
3. Rotate sensor (anti-clockwise) by ¼ turn to remove it (bayonet fitting).
4. Check the sensor resistance. Compare the resistance with the value for the currently recorded temperature from the following diagram.
   In the event of severe deviation (> 10 %), replace the sensor.
5. Rotate sensor (clockwise) by ¼ turn to install it.

   ⚠ **Danger**
   Escaping flue gas can cause poisoning.
   When restarting, check for leaks on the flue gas side.

6. Reconnect leads, flue gas temperature sensor Ⓒ.
7. If the permissible flue gas temperature has been exceeded, the flue gas temperature sensor locks out the appliance. Reset the burner on the programming unit once the flue system has cooled down.

Repairs (cont.)

- Flue gas temperature sensor
- Flow temperature sensor
- Cylinder temperature sensor
- Outlet temperature sensor
- Temperature sensor, low loss header

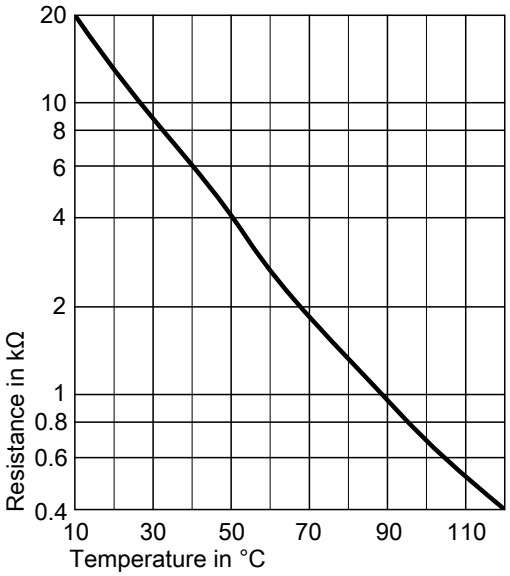

Sensor type: NTC 10 kΩ

- Outside temperature sensor

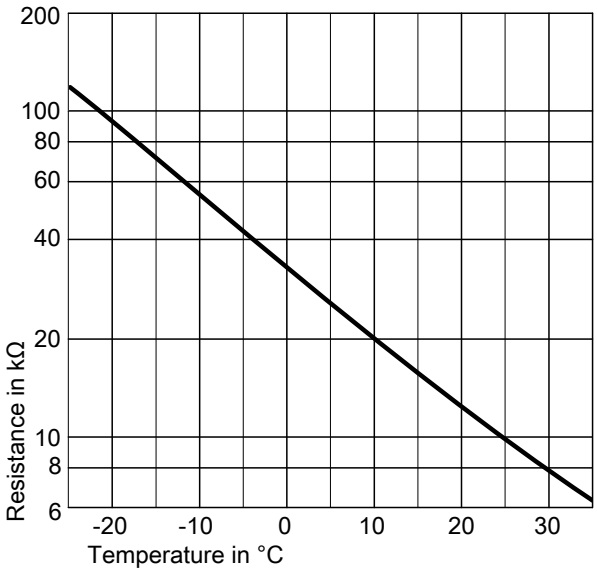

Sensor type: NTC 10 kΩ

Fault during commissioning (fault message 416)

During commissioning, the control unit checks for correct placement of the flue gas temperature sensor. If fault message 416 is displayed:

1. Check whether the flue gas temperature sensor is correctly installed (bayonet fitting). See previous diagram.
2. If required, correct the position of the flue gas temperature sensor.
3. Check the flue gas temperature sensor resistance. See previous chapter. Replace faulty flue gas temperature sensor if required.
4. Turn off the ON/OFF switch.
5. Turn the ON/OFF switch back on.
   Restart the commissioning assistant.
6. Check for leaks on the flue gas side.

Note
If fault message 416 continues to be displayed although the flue gas temperature sensor is correctly positioned: Initial commissioning may result in burner faults, e.g. caused by air in the gas line. Eliminate the fault and reset the appliance.

Check temperature sensors at EM-S1 extension (ADIO electronics module) or at SDIO/SM1A electronics module

Check temperature sensors: Installation and service instructions of relevant accessory.

Repairs (cont.)

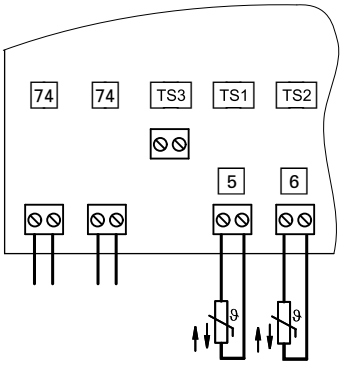

Fig. 47

Check cylinder temperature sensor

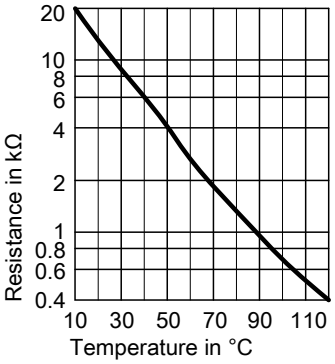

Fig. 48 Sensor type: NTC 10 kΩ

1. Disconnect plug TS1 [5] from the electronics module. Measure the resistance.
2. Compare the sensor resistance to the curve.
3. In the event of severe deviation (> 10 %), replace the sensor.

Check collector temperature sensor

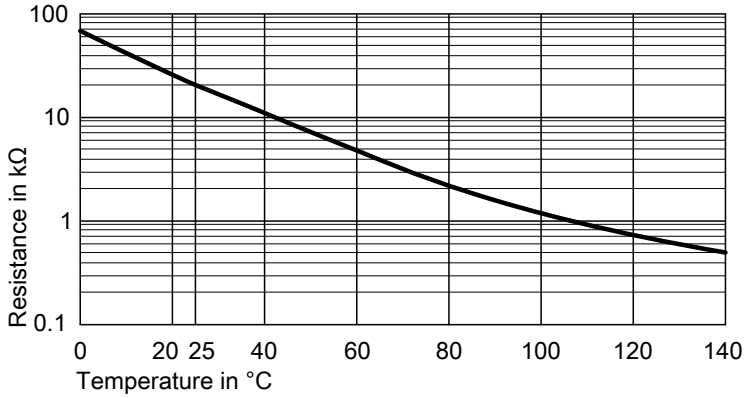

Fig. 49 Sensor type: NTC 20 kΩ

1. Disconnect plug TS2 [6] from the electronics module. Measure the resistance.
2. Compare the sensor resistance to the curve.
3. In the event of severe deviation (> 10 %), replace the sensor.

Repairs (cont.)

Replacing the HBMU heat management unit

Note
If replacing the HBMU heat management unit, "ViGuide" must be used.

See spare part installation instructions and internet address: www.viguide.info

Replacing the power cable

When replacing the power cable, only use the power cable available as a spare part from Viessmann.

Replacing the HMI connecting cable

! **Please note**
Incorrect routing of the cable can lead to heat damage and impairment of the EMC properties. For positioning and securing of the cable (fixing point of the cable tie) see connecting cable installation instructions.

Checking the plate heat exchanger

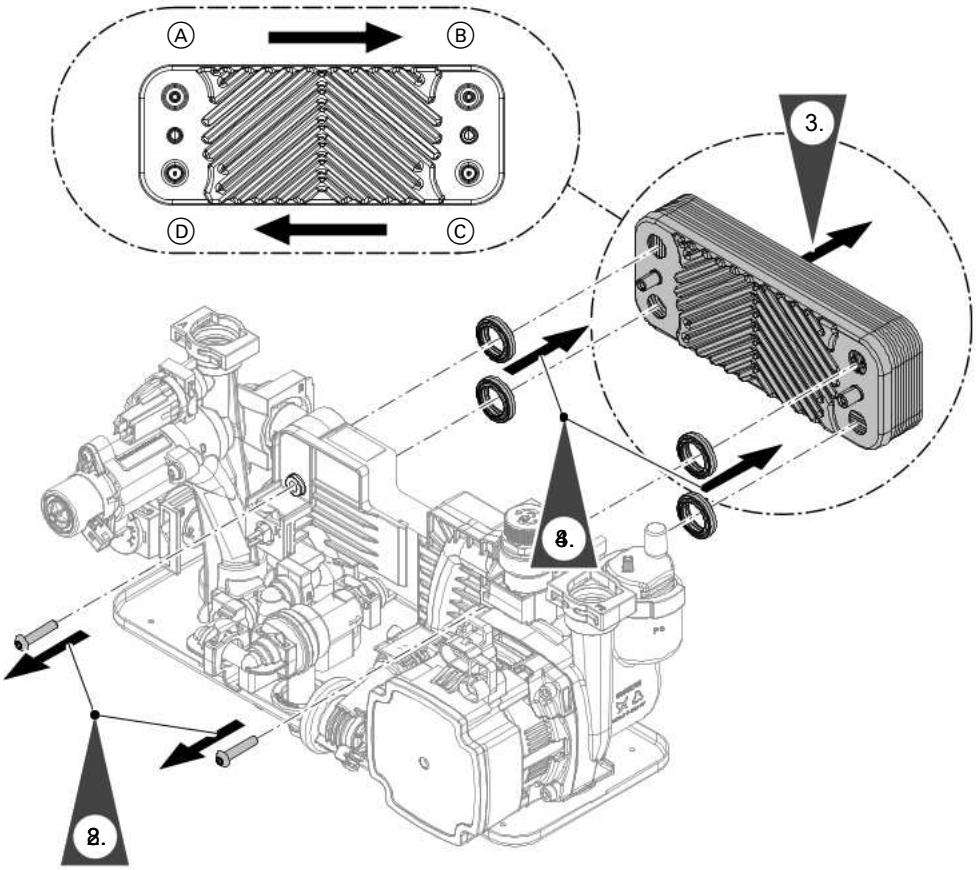

Fig. 50

Ⓐ Heating water flow
Ⓑ Heating water return
Ⓒ Cold water
Ⓓ DHW

1. Shut off and drain the boiler on the heating water and DHW sides.
2. Undo screws.

Repairs (cont.)

3. Remove plate heat exchanger.

   Note
   During and after removal, small amounts of water may trickle from the plate heat exchanger.

4. Remove gaskets and dispose of them.

5. Check connections on the DHW side for scaling. Clean or replace the plate heat exchanger as required.

6. Check connections on the heating water side for contamination. Clean or replace the plate heat exchanger as required.

7. Install plate heat exchanger in reverse order using new gaskets.
   Tighten screws as tightly as necessary and ensure that the components are undamaged and are functioning correctly throughout service life.
   Observe torque settings if a torque wrench is available.
   Screw torque: 3.2 Nm $^{\pm 0.2}$

   Note
   During installation, ensure the connections are positioned and the gaskets seated correctly.

   Danger
   Risk of electric shock from escaping heating water or DHW.
   Check all water side connections for tightness.

Removing the hydraulic unit

If components of the hydraulic unit have to be replaced.

Danger
Risk of electric shock from escaping heating water or DHW
After installation, check all connections on the water side for leaks.

Repairs (cont.)

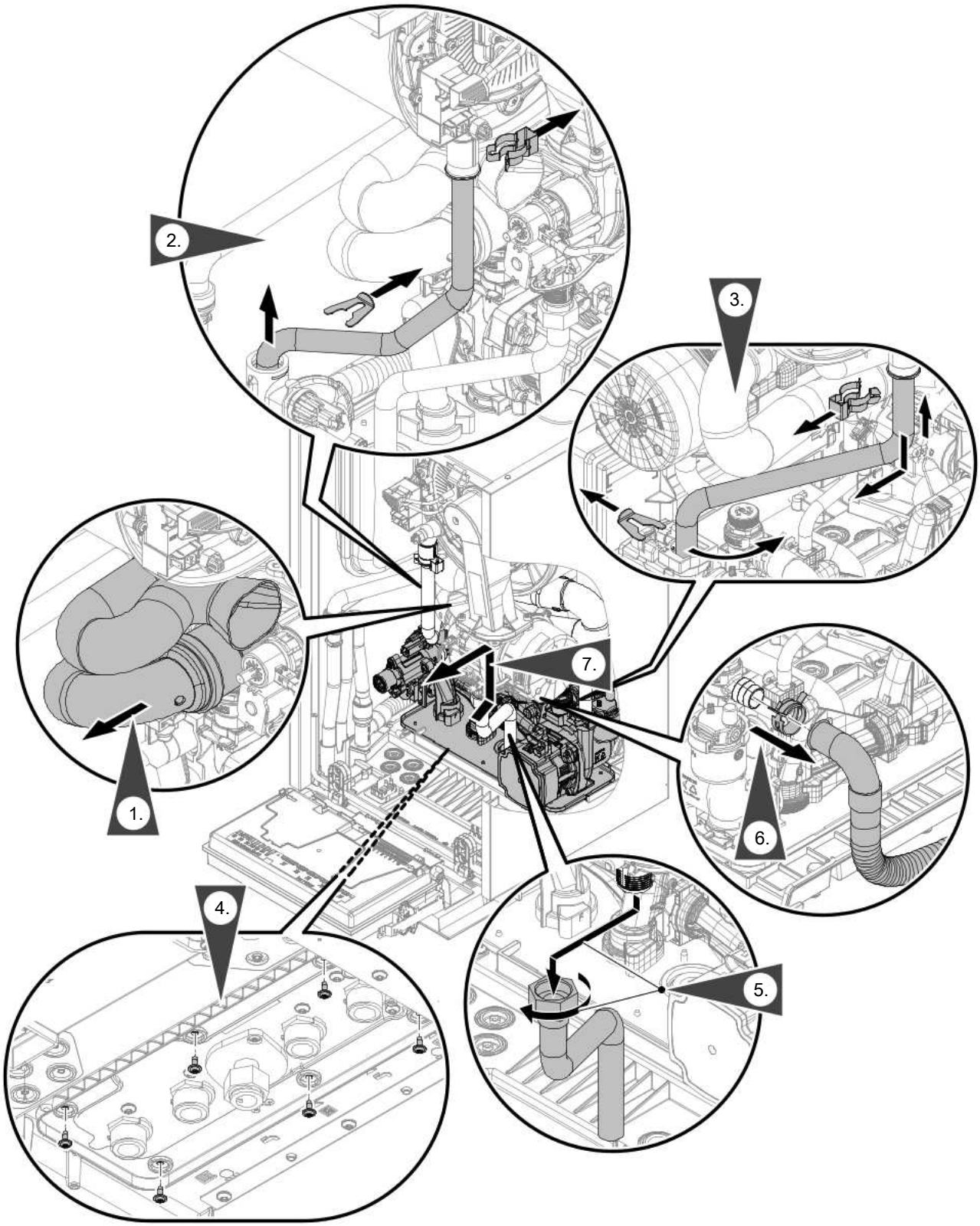

Fig. 51

6167586

Repairs (cont.)

Checking the fuse

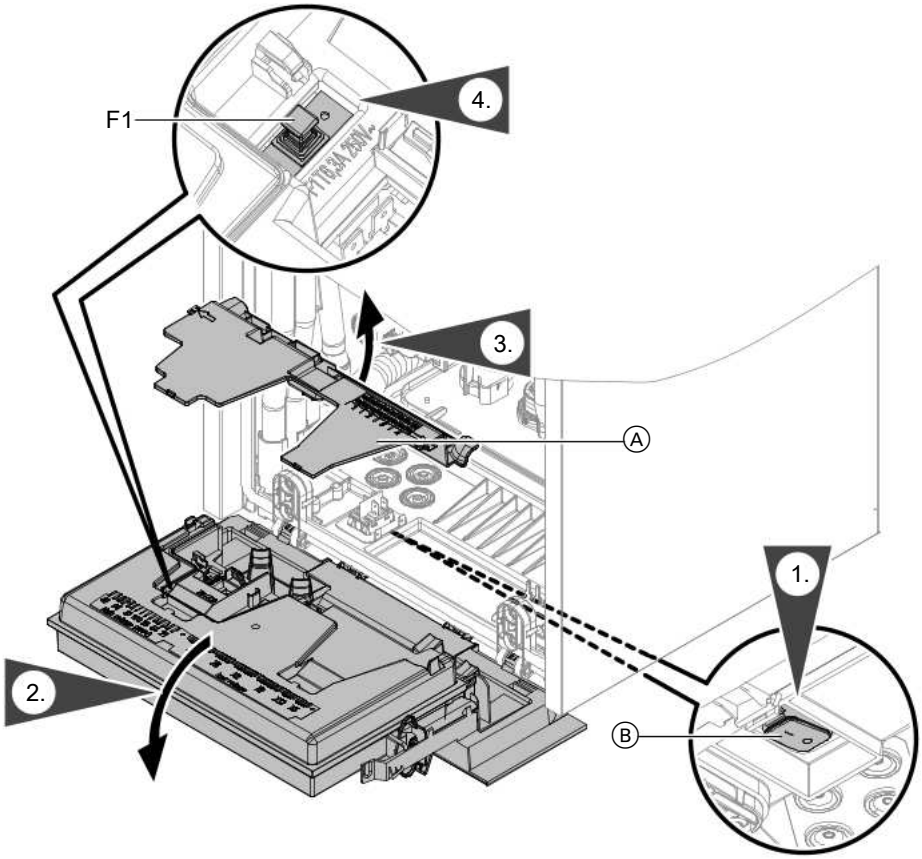

Fig. 52

1. Switch ON/OFF switch Ⓑ OFF.
2. Remove the programming unit.
3. Pivot the HBMU heat management unit down.
4. Remove cover Ⓐ.
5. Check fuse F1 (see connection and wiring diagram).

Danger
Incorrect or improperly fitted fuses can lead to an increased risk of fire.
- Insert fuses without using any force. Position fuses correctly.
- Only use structurally identical types with the specified response characteristics.

Appliance functions

Heating mode

- **Weather-compensated operation:**
  The rooms are heated in accordance with the room temperature and time program settings.
  The control unit determines a set flow temperature for the heat generator, subject to the outside temperature, the room temperature and the slope/level of the heating curve.
- **Room temperature-dependent operation (constant operation with room thermostat):**
  System with one heating circuit without mixer. The rooms are heated in accordance with the settings of the room temperature controller/room thermostat (accessories).
  If the room temperature controller/room thermostat issues a demand, the standard set flow temperature is maintained. If there is no demand present, the reduced set flow temperature is maintained.
- **Constant operation without room thermostat:**
  The rooms are heated according to the time program settings.
  In the time phases at standard room temperature, the standard set flow temperature or the set comfort flow temperature is maintained. Outside the set time phases, the reduced set flow temperature is maintained.
- **OpenTherm:**
  Rooms are heated in accordance with the settings of the room temperature controller/room thermostat (accessories). The OpenTherm controller specifies the flow temperature for the heat generator.

Venting program

During the venting program, the circulation pump will be alternately switched on and off for 30 s over a period of 20 min.
The 3-way diverter valve alternates between central heating and DHW heating for a certain period of time.
The burner is switched off during the venting program.

Activate venting program: See chapter "Commissioning, inspection and maintenance".

Filling program

In the delivered condition, the 3-way diverter valve is set to its central position, so the system can be filled completely. After the control unit has been switched on, the 3-way diverter valve no longer goes into its central position.
If the system is to be filled with the control unit switched on, the 3-way diverter valve is moved to its central position in the filling program and the pump is started.

Activate filling program: See chapter "Commissioning, inspection and maintenance".

In this position, the control unit can be switched off and the system can be filled completely. When the function is enabled, the burner shuts down. The program automatically becomes inactive after 20 min.

Heating curve

The heating curves represent the relationship between the outside temperature and the flow temperature. Simplified: The lower the outside temperature, the higher the flow temperature must be in order to reach the set room temperature.

Factory settings:
- Slope = 1
- Level = 3

Note
If heating circuits with mixer are present in the heating system: The flow temperature of the heat generator is one differential temperature higher than the flow temperature for the heating circuits with mixer. Differential temperature in delivered condition set to 8 K.

Appliance functions (cont.)

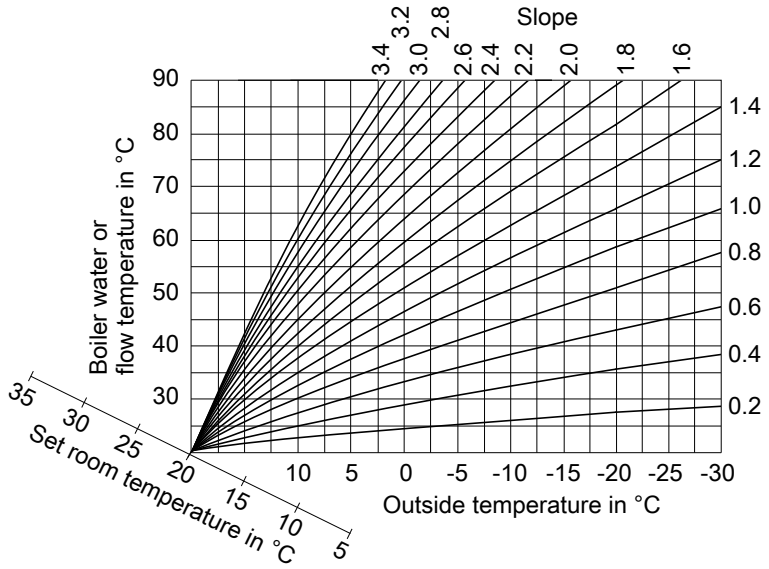

Fig. 53

Slope setting ranges:
- Underfloor heating systems: 0.2 to 0.8
- Low temperature heating systems: 0.8 to 1.6

Set room temperature

Standard room temperature or comfort room temperature

Individually adjustable for each heating circuit.
The heating curve is offset along the set room temperature axis. The start and stop points of the heating circuit pumps depend on the Heating limit, outside temperature for heating circuit... setting.

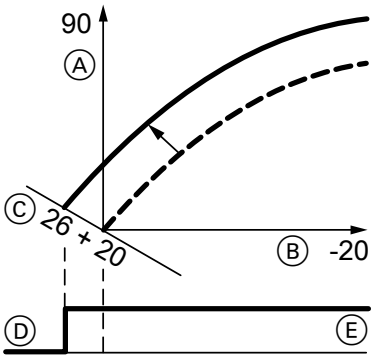

Fig. 54 Example 1: Changing the set room temperature from 20 to 26 °C

Ⓐ Flow temperature in °C
Ⓑ Outside temperature in °C
Ⓒ Set room temperature in °C
Ⓓ Heating circuit pump "OFF"
Ⓔ Heating circuit pump "ON"

Changing the set room temperature

Operating instructions

Reduced room temperature

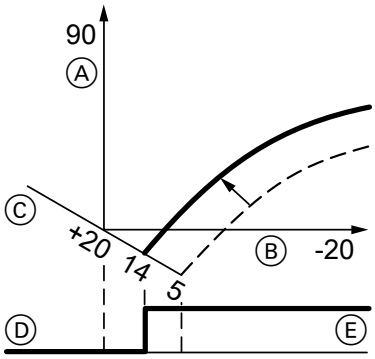

Fig. 55 Example 2: Changing the reduced set room temperature from 5 °C to 14 °C

Ⓐ Flow temperature in °C
Ⓑ Outside temperature in °C
Ⓒ Set room temperature in °C
Ⓓ Heating circuit pump "OFF"
Ⓔ Heating circuit pump "ON"

Changing the reduced set room temperature

Operating instructions

Changing the slope and level

Individually adjustable for each heating circuit

Appliance functions (cont.)

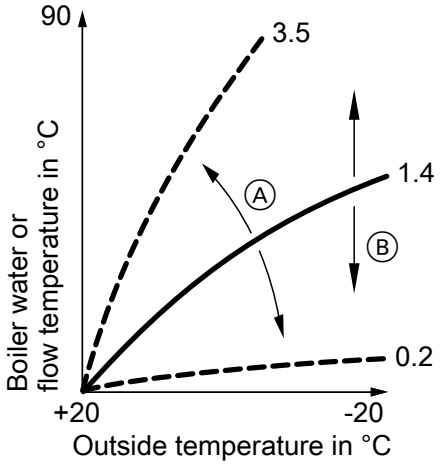

Fig. 56

Ⓐ Changing the slope
Ⓑ Changing the level (vertical parallel offset of the heating curve)

Screed drying

When enabling screed drying, observe the information provided by the screed manufacturer.
When the screed drying function is activated, the heating circuit pumps of **all** heating circuits are switched on and the flow temperature is maintained in accordance with the selected profile. After completion (30 days), the heating circuits with mixer are automatically controlled with the set parameters.
Screed drying is adjusted in the system configuration:

- 0 = OFF
- 2 = Temperature profile A
- 3 = Temperature profile B
- ...
- 7 = Temperature profile F

Note
During screed drying, DHW heating is not available.

Parameter "Screed drying":

Temperature profile A (EN 1264-4)

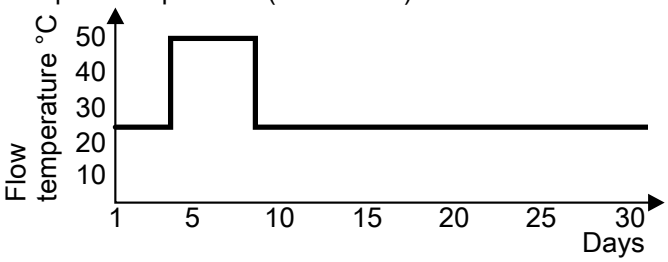

Fig. 57

Observe EN 1264. The report to be provided by the heating contractor must contain the following details regarding heat-up:

- Heat-up data with the relevant set flow temperatures
- Max. flow temperature achieved.
- Operating state and outside temperature at handover

Note
Temperature profile 6 ends after 21 days.

The function continues after a power failure or after the control unit has been switched off. When screed drying has completed or been manually switched off, the system is controlled in accordance with the selected parameters.

Appliance functions (cont.)

Temperature profile B (ZV parquet and flooring technology)

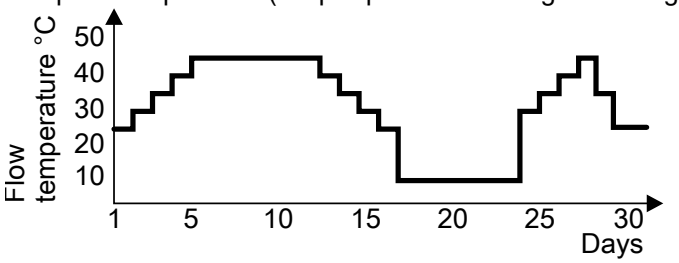

Fig. 58

Temperature profile C

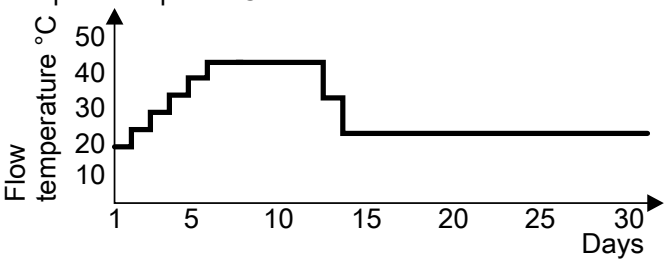

Fig. 59

Temperature profile D

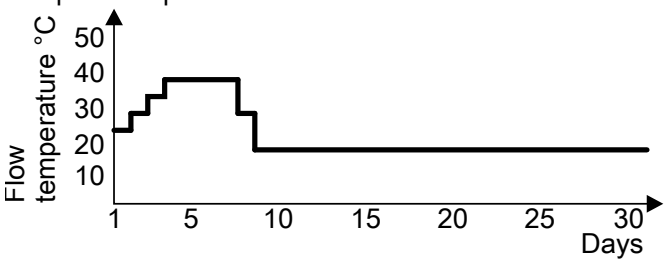

Fig. 60

Temperature profile E

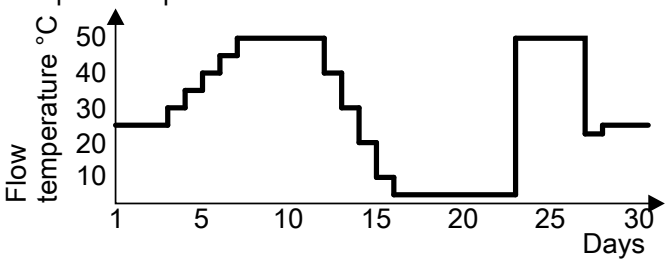

Fig. 61

Temperature profile F

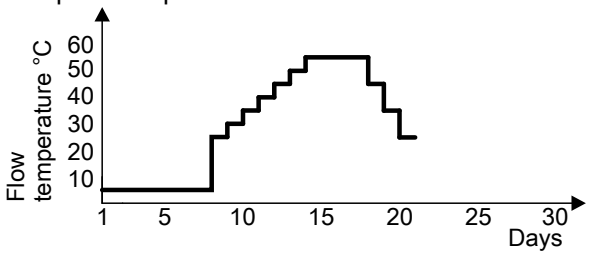

Fig. 62 Ends after 21 days.

DHW heating (system boilers only)

The burner, the circulation pump and the 3-way diverter valve are started or changed over if the cylinder temperature lies 2.5 K below the set cylinder temperature.
In the delivered condition, the set boiler water temperature is 20 K higher than the set cylinder temperature.
If the actual cylinder temperature exceeds the set cylinder temperature by 2.5 K, the burner shuts down and circulation pump run-on begins (only with separate DHW cylinder).

Danger
Risk of injury due to increased DHW temperature.

Inform the system user of the risk from the raised outlet temperature at the draw-off points.

- Gas condensing system boiler:
  If the set DHW temperature is set to over 60 °C
- Gas condensing combi boiler:
  If there are several draw-off events in quick succession or several appliance calibration processes

External heating circuit hook-up (if installed)

Note
Only in conjunction with weather-compensated operation.

- Function:
  - If the external demand is active (plug 96 or digital input on EM-EA1 (DIO) electronics module closed), the heating circuit is supplied with heat.
  - If the external demand is inactive (contact open), heat supply to the heating circuit ends (regardless of the current set room temperature or the switching time).

    Please note

    There is no frost protection for the connected heating circuits.
- Connection:
  - If only one heating circuit is hooked up, use connection at plug 96: See page 26.
  - If multiple heating circuits are hooked up, connect all contacts to EM-EA1 extension (DIO electronics module) with the subscriber number. 1 (rotary switch = 1).

    See EM-EA1 extension installation instructions

    Note
    *Perform the hook-up with subscriber number **"1"**.*

HBMU heat management unit

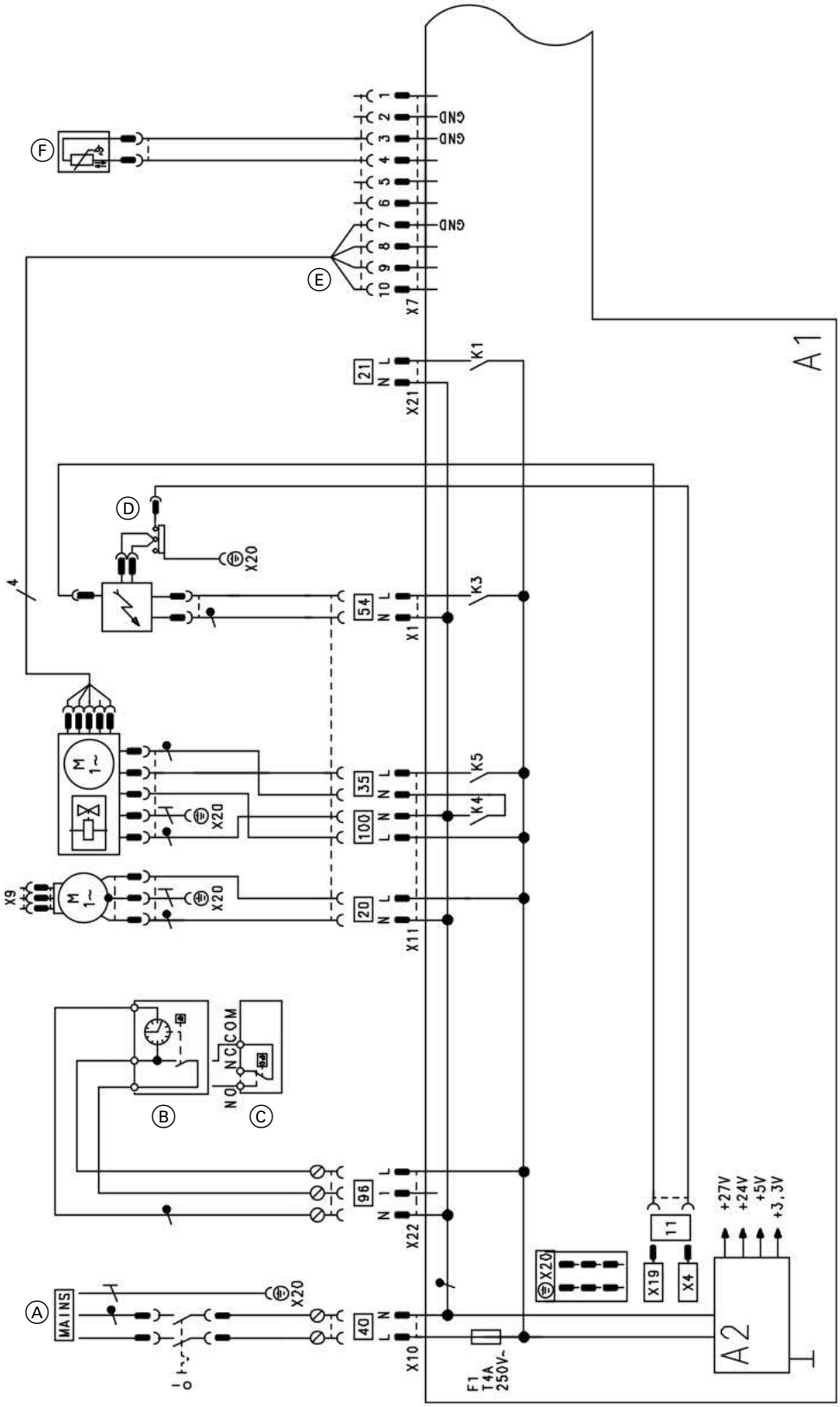

Fig. 63

A1 HBMU heat management unit
X... Electrical interfaces
A2 Power supply unit
Ⓐ Power supply 40
Ⓑ Vitotrol 100, type UTA
Ⓒ Vitotrol 100, type UTDB
Ⓓ Ignition unit/ionisation 54
Ⓕ Outlet temperature sensor (combi boiler only)
35 Gas solenoid valve
100 Fan motor
Ⓔ Fan motor control
96 Floating switching contact, 230 V connection accessories, see page 26

6167586

HBMU heat management unit (cont.)

20 Heating circuit pump
21 No function

HBMU heat management unit (cont.)

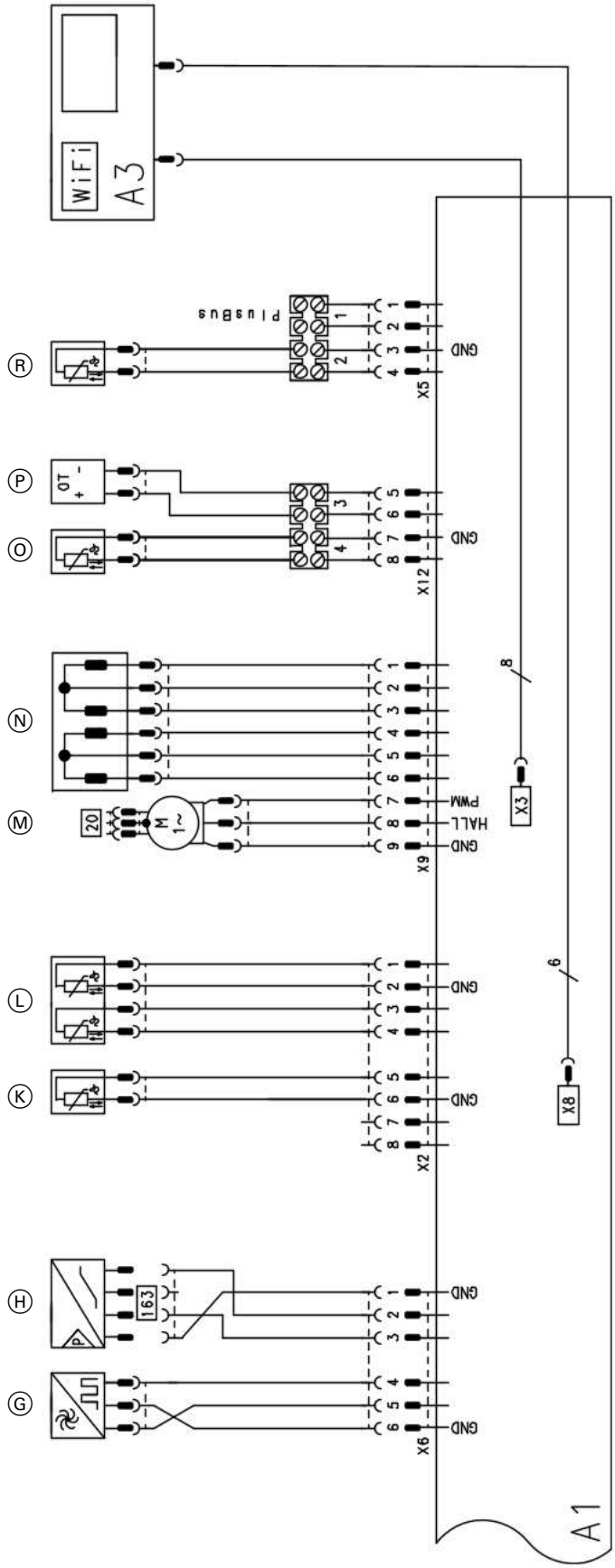

Fig. 64

A1 HBMU heat management unit
A3 Programming unit with communication module
X... Electrical interfaces
Ⓖ Flow sensor (combi boiler only)
Ⓗ Water pressure sensor
Ⓚ Flue gas temperature sensor
Ⓛ Boiler water temperature sensor
Ⓜ Circulation pump (PWM)

6167586

HBMU heat management unit (cont.)

Ⓝ Diverter valve stepper motor
Ⓞ Outside temperature sensor
Ⓟ Remote control (OpenTherm device)
Ⓡ Cylinder temperature sensor (system boiler only)

Commissioning/service reports

Settings and test values		Set value	Commission-ing	Maintenance/ service	Maintenance/ service
Date					
Signature					
Static pressure	mbar kPa	≤ 57.5 ≤ 5.75			
Supply pressure (flow pressure)					
☐ For natural gas	mbar kPa	See table "Supply pressure" (Commissioning ...)			
☐ For LPG	mbar kPa				
☐ *Enter gas type*					
Carbon dioxide content CO_2 With natural gas					
▪ At lower heating output	% by vol.	See "Checking the combustion quality" (Commissioning ...)			
▪ At upper heating output	% by vol.				
For LPG					
▪ At lower heating output	% by vol.				
▪ At upper heating output	% by vol.				
Oxygen content O_2					
▪ At lower heating output	% by vol.				
▪ At upper heating output	% by vol.				
Carbon monoxide content CO					
▪ At lower heating output	ppm	< 1000			
▪ At upper heating output	ppm	< 1000			

Specification

Gas condensing system boiler

Use with single connection

Gas boiler, type B and C, category II_{2N3P}					
Type		**B1HF**			
Rated heating output range (details to EN 15502)					
T_F/T_R = 50/30 °C					
Natural gas	**kW**	**3.2 to 11.0**	**3.2 to 19.0**	**3.2 to 25.0**	**3.2 to 32.0**
LPG	**kW**	**3.2 to 11.0**	**3.2 to 19.0**	**3.2 to 25.0**	**3.2 to 32.0**
T_F/T_R = 80/60 °C					
Natural gas	**kW**	**2.9 to 10.1**	**2.9 to 17.5**	**2.9 to 23.0**	**2.9 to 29.3**
LPG	**kW**	**2.9 to 10.1**	**2.9 to 17.5**	**2.9 to 23.0**	**2.9 to 29.3**
Rated heating output for DHW heating					
Natural gas	kW	2.9 to 17.5	2.9 to 17.5	2.9 to 23.0	2.9 to 29.3
LPG	kW	2.9 to 17.5	2.9 to 17.5	2.9 to 23.0	2.9 to 29.3
Rated heat input (Qn)					
Natural gas	kW	3.0 to 10.3	3.0 to 17.8	3.0 to 23.4	3.0 to 29.9
LPG	kW	3.0 to 10.3	3.0 to 17.8	3.0 to 23.4	3.0 to 29.9
Rated heat input for DHW heating (Qnw)					
Natural gas	kW	3.0 to 17.8	3.0 to 17.8	3.0 to 23.4	3.0 to 29.9
LPG	kW	3.0 to 17.8	3.0 to 17.8	3.0 to 23.4	3.0 to 29.9
Product ID		CE-0085DL0217			
IP rating to EN 60529		IP X4 to EN 60529			
NO_x		6	6	6	6
Gas supply pressure					
Natural gas	mbar	20	20	20	20
	kPa	2	2	2	2
LPG	mbar	50	50	50	50
	kPa	5	5	5	5
Max. permiss. gas supply pressure[*2]					
Natural gas	mbar	13 to 25.0	13 to 25.0	13 to 25.0	13 to 25.0
	kPa	1.3 to 2.5	1.3 to 2.5	1.3 to 2.5	1.3 to 2.5
LPG	mbar	25 to 57.5	25 to 57.5	25 to 57.5	25 to 57.5
	kPa	2.5 to 5.75	2.5 to 5.75	2.5 to 5.75	2.5 to 5.75
Sound power level (according to EN ISO 15036-1)					
▪ At partial load	dB(A)	31.9	31.9	31.9	31.9
▪ At rated heating output (DHW heating)	dB(A)	42.3	42.3	46.1	48.4
Power consumption (in the delivered condition)	W	40	48	67	113

[*2] *If the gas supply pressure is higher than the maximum permissible value, install a separate gas pressure governor upstream of the system.*

Appendix

6167586

Specification (cont.)

Use with single connection

Gas boiler, type B and C, category II_{2N3P}

Type		**B1HF**			
Rated heating output range (details to EN 15502)					
T_F/T_R = 50/30 °C					
Natural gas	**kW**	**3.2 to 11.0**	**3.2 to 19.0**	**3.2 to 25.0**	**3.2 to 32.0**
LPG	**kW**	**3.2 to 11.0**	**3.2 to 19.0**	**3.2 to 25.0**	**3.2 to 32.0**
T_F/T_R = 80/60 °C					
Natural gas	**kW**	**2.9 to 10.1**	**2.9 to 17.5**	**2.9 to 23.0**	**2.9 to 29.3**
LPG	**kW**	**2.9 to 10.1**	**2.9 to 17.5**	**2.9 to 23.0**	**2.9 to 29.3**
Rated voltage	V	230			
Rated frequency	Hz	50			
Appliance fuse protection	A	4.0			
Backup fuse (power supply)	A	16			
Communication module (integral)					
WiFi frequency band	MHz	2400 to 2483.5			
Max. transmission power	dBm	20			
Low power radio frequency band	MHz	2400 to 2483.5			
Max. transmission power	dBm	10			
Supply voltage	V ⎓	24			
Power consumption	W	4			
Electronic temperature limiter setting (TN)	°C	91			
Electronic temperature cut-out setting	°C	110			
Electronic flue gas temperature limiter setting	°C	110			
Permissible ambient temperature					
▪ During operation		Frost-free, dry and heated rooms			
▪ During storage and transport	°C	–5 to +60			
Weight					
▪ Excl. heating water and packaging	kg	32	32	32	32
▪ Incl. heating water	kg	37.6	37.6	37.6	37.6
Water capacity (excl. diaphragm expansion vessel)	l	3.0	3.0	3.0	3.0
Max. flow temperature	°C	82	82	82	82
Max. flow rate (Limit for the use of hydraulic separation)	l/h	See residual head graph			
Nominal circulating water volume At T_F/T_R = 80/60 °C	l/h	434	752	988	1259
Diaphragm expansion vessel					
Capacity	l	8	8	8	8
Pre-charge pressure	bar	0.75	0.75	0.75	0.75
	kPa	75	75	75	75

Appendix

6167586

Specification (cont.)

Use with single connection

Gas boiler, type B and C, category II_{2N3P}

Type		**B1HF**			
Rated heating output range (details to EN 15502)					
T_F/T_R = 50/30 °C					
Natural gas	**kW**	**3.2 to 11.0**	**3.2 to 19.0**	**3.2 to 25.0**	**3.2 to 32.0**
LPG	**kW**	**3.2 to 11.0**	**3.2 to 19.0**	**3.2 to 25.0**	**3.2 to 32.0**
T_F/T_R = 80/60 °C					
Natural gas	**kW**	**2.9 to 10.1**	**2.9 to 17.5**	**2.9 to 23.0**	**2.9 to 29.3**
LPG	**kW**	**2.9 to 10.1**	**2.9 to 17.5**	**2.9 to 23.0**	**2.9 to 29.3**
Permiss. operating pressure	bar	3	3	3	3
	MPa	0.3	0.3	0.3	0.3
Connections (with connection accessories)					
Boiler flow and return	R	¾	¾	¾	¾
Cold water and DHW	G	½	½	½	½
Dimensions					
Length	mm	360	360	360	360
Width	mm	400	400	400	400
Height	mm	700	700	700	700
Gas connection	R	¾	¾	¾	¾
Supply values Relative to the max. load and 1013 mbar/15 °C					
With gas					
Natural gas E	m^3/h	1.88	1.88	2.48	3.16
Natural gas LL	m^3/h	2.19	2.19	2.88	3.68
LPG	kg/h	1.38	1.38	1.82	2.32
Flue gas parameters					
Temperature (at a return temperature of 30 °C)					
▪ At rated heating output	°C	39	41	46	59
▪ At partial load	°C	38	38	38	38
Temperature (at a return temperature of 60 °C, for DHW heating)	°C	64	65	67	72
Flue gas superheating temperature	°C	120	120	120	120
Mass flow rate (for DHW heating)					
Natural gas					
▪ At maximum heating output	kg/h	31.7	31.7	41.6	54.9
▪ At partial load	kg/h	5.6	5.6	5.6	5.6
LPG					
▪ At maximum heating output	kg/h	30.1	30.1	41.0	53.9
▪ At partial load	kg/h	5.1	5.1	5.1	5.1
Available draught	Pa	116	116	168	323
	mbar	1.16	1.16	1.68	3.23
Available draught For type B_{23P}	Pa	232	527	698	635

6167586

Specification (cont.)

Use with single connection

Gas boiler, type B and C, category II_{2N3P}					
Type		**B1HF**			
Rated heating output range (details to EN 15502)					
T_F/T_R = 50/30 °C					
Natural gas	**kW**	**3.2 to 11.0**	**3.2 to 19.0**	**3.2 to 25.0**	**3.2 to 32.0**
LPG	**kW**	**3.2 to 11.0**	**3.2 to 19.0**	**3.2 to 25.0**	**3.2 to 32.0**
T_F/T_R = 80/60 °C					
Natural gas	**kW**	**2.9 to 10.1**	**2.9 to 17.5**	**2.9 to 23.0**	**2.9 to 29.3**
LPG	**kW**	**2.9 to 10.1**	**2.9 to 17.5**	**2.9 to 23.0**	**2.9 to 29.3**
Max. amount of condensate to DWA-A 251	l/h	2.5	2.5	3.3	4.2
Condensate connection (hose nozzle)	Ø mm	20 to 24	20 to 24	20 to 24	20 to 24
Flue gas connection	Ø mm	60	60	60	60
Ventilation air connection	Ø mm	100	100	100	100
Standard seasonal efficiency [to DIN] at					
T_F/T_R = 40/30 °C	%	Up to 98 (H_s) [gross cv]			
Energy efficiency class		A	A	A	A
Seasonal central heating energy efficiency	ηs (%)	93	93	94	94

Note
With appliances for use in multiple connection (vertical) and cascades (horizontal), the specification in the table above apply, with the exception of the following data – see table on appliances for multiple connection on page 114:

Use with multiple connection

Gas boiler, type B and C, category II_{2N3P}					
Type		**B1HF-M**			
Rated heating output range (to EN 15502)					
T_F/T_R = 50/30 °C					
Natural gas	**kW**	**5.7 to 11.0**	**5.7 to 19.0**	**5.7 to 25.0**	**5.7 to 32.0**
T_F/T_R = 80/60 °C					
Natural gas	**kW**	**5.2 to 10.1**	**5.2 to 17.5**	**5.2 to 23.0**	**5.2 to 29.3**
Rated heating output for DHW heating					
Natural gas	kW	5.2 to 17.5	5.2 to 17.5	5.2 to 23.0	5.2 to 29.3
Rated heat input (Qn)					
Natural gas	kW	5.3 to 10.3	5.3 to 17.8	5.3 to 23.4	5.3 to 29.9
Rated heat input for DHW heating (Qnw)					
Natural gas	kW	5.3 to 17.8	5.3 to 17.8	5.3 to 23.4	5.3 to 29.9

Specification (cont.)

Use with multiple connection

Gas boiler, type B and C, category II_{2N3P}					
Type		**B1HF-M**			
Rated heating output range (to EN 15502)					
T_F/T_R = 50/30 °C					
Natural gas	**kW**	**5.7 to 11.0**	**5.7 to 19.0**	**5.7 to 25.0**	**5.7 to 32.0**
T_F/T_R = 80/60 °C					
Natural gas	**kW**	**5.2 to 10.1**	**5.2 to 17.5**	**5.2 to 23.0**	**5.2 to 29.3**
Mass flow rate (for DHW heating)					
Natural gas					
▪ At maximum heating output	kg/h	31.7	31.7	41.6	54.9
▪ At partial load	kg/h	9.8	9.8	9.8	9.8
Available draught for type $C_{(10)}$ (at header system interface)	Pa	25	25	25	25
Maximum permissible pressure differential between flue gas outlet and air inlet for $C_{(10)}$	Pa	–200	–200	–200	–200

Note
The supply values are only for reference (e.g. in the gas contract application) or for a supplementary, rough estimate to check the volumetric settings. Due to factory settings, the gas pressure must not be altered from these values. Reference: 15 °C, 1013 mbar (101.3 kPa).

Gas condensing combi boiler

Use with single connection

Gas boiler, type B and C, category II_{2N3P}				
Type		**B1KF-26**	**B1KF-30**	**B1KF-35**
Rated heating output range (details to EN 15502)				
T_F/T_R = 50/30 °C				
Natural gas	**kW**	**3.2 to 25.0**	**3.2 to 25.0**	**3.2 to 32.0**
LPG	**kW**	**3.2 to 25.0**	**3.2 to 25.0**	**3.2 to 32.0**
T_F/T_R = 80/60 °C				
Natural gas	**kW**	**2.9 to 23.0**	**2.9 to 23.0**	**2.9 to 29.3**
LPG	**kW**	**2.9 to 23.0**	**2.9 to 23.0**	**2.9 to 29.3**
Rated heating output for DHW heating				
Natural gas	kW	2.9 to 26	2.9 to 30	2.9 to 35
LPG	kW	2.9 to 26	2.9 to 30	2.9 to 35
Rated heat input (Qn)				
Natural gas	kW	3.0 to 23.4	3.0 to 23.4	3.0 to 29.9
LPG	kW	3.0 to 23.4	3.0 to 23.4	3.0 to 29.9

Specification (cont.)

Use with single connection

Gas boiler, type B and C, category II_{2N3P}				
Type		**B1KF-26**	**B1KF-30**	**B1KF-35**
Rated heating output range (details to EN 15502)				
T_F/T_R = 50/30 °C				
Natural gas	**kW**	**3.2 to 25.0**	**3.2 to 25.0**	**3.2 to 32.0**
LPG	**kW**	**3.2 to 25.0**	**3.2 to 25.0**	**3.2 to 32.0**
T_F/T_R = 80/60 °C				
Natural gas	**kW**	**2.9 to 23.0**	**2.9 to 23.0**	**2.9 to 29.3**
LPG	**kW**	**2.9 to 23.0**	**2.9 to 23.0**	**2.9 to 29.3**
Rated heat input for DHW heating (Qnw)				
Natural gas	kW	3.0 to 26.5	3.0 to 30.6	3.0 to 35.3
LPG	kW	3.0 to 26.5	3.0 to 30.6	3.0 to 35.3
Product ID		CE-0085DL0217		
IP rating to EN 60529		IPX4 to EN 60529		
Gas supply pressure				
Natural gas	mbar	20	20	20
	kPa	2	2	2
LPG	mbar	50	50	50
	kPa	5	5	5
Max. permiss. gas supply pressure[*3]				
Natural gas	mbar	25.0	25.0	25.0
	kPa	2.5	2.5	2.5
LPG	mbar	57.5	57.5	57.5
	kPa	5.75	5.75	5.75
Sound power level (according to EN ISO 15036-1)				
▪ At partial load	dB(A)	31.9	31.9	31.9
▪ At rated heating output (DHW heating)	dB(A)	49.1	50	50.4
Power consumption (in the delivered condition)	W	45	64	110
Rated voltage	V	230		
Rated frequency	Hz	50		
Appliance fuse protection	A	4		
Backup fuse (power supply)	A	16		
Communication module (integral)				
WiFi frequency band	MHz	2400 to 2483.5		
Max. transmission power	dBm	20		
Low power radio frequency band	MHz	2400 to 2483.5		
Max. transmission power	dBm	10		
Supply voltage	V ⎓	24		
Power consumption	W	4		

[*3] *If the gas supply pressure is higher than the maximum permissible value, install a separate gas pressure governor upstream of the system.*

Specification (cont.)

Use with single connection

Gas boiler, type B and C, category II_{2N3P}				
Type		**B1KF-26**	**B1KF-30**	**B1KF-35**
Rated heating output range (details to EN 15502)				
T_F/T_R = 50/30 °C				
Natural gas	**kW**	**3.2 to 25.0**	**3.2 to 25.0**	**3.2 to 32.0**
LPG	**kW**	**3.2 to 25.0**	**3.2 to 25.0**	**3.2 to 32.0**
T_F/T_R = 80/60 °C				
Natural gas	**kW**	**2.9 to 23.0**	**2.9 to 23.0**	**2.9 to 29.3**
LPG	**kW**	**2.9 to 23.0**	**2.9 to 23.0**	**2.9 to 29.3**
Electronic temperature limiter setting (TN)	°C	91		
Electronic temperature cut-out setting	°C	110		
Electronic flue gas temperature limiter setting	°C	110		
Permissible ambient temperature				
▪ During operation		Frost-free, dry and heated rooms		
▪ During storage and transport	°C	–5 to +60		
Weight				
▪ Excl. heating water and packaging	kg	35	35	35
▪ Incl. heating water	kg	41	41	41
Water capacity (excl. diaphragm expansion vessel)	l	3.0	3.0	3.0
Max. flow temperature	°C	82	82	82
Max. flow rate (Limit for the use of hydraulic separation)	l/h	See residual head graphs		
Nominal circulating water volume At T_F/T_R = 80/60 °C	l/h	752	988	1259
Diaphragm expansion vessel				
Capacity	l	8	8	8
Pre-charge pressure	bar kPa	0.75 75	0.75 75	0.75 75
Permiss. operating pressure	bar MPa	3 0.3	3 0.3	3 0.3
Connections (with connection accessories)				
Boiler flow and return	R	¾	¾	¾
Cold water and DHW	G	½	½	½
Dimensions				
Length	mm	360	360	360
Width	mm	400	400	400
Height	mm	700	700	700
Gas connection	R	¾	¾	¾

Appendix

6167586

Specification (cont.)

Use with single connection

Gas boiler, type B and C, category II_{2N3P}				
Type		**B1KF-26**	**B1KF-30**	**B1KF-35**
Rated heating output range (details to EN 15502)				
T_F/T_R = 50/30 °C				
Natural gas	**kW**	**3.2 to 25.0**	**3.2 to 25.0**	**3.2 to 32.0**
LPG	**kW**	**3.2 to 25.0**	**3.2 to 25.0**	**3.2 to 32.0**
T_F/T_R = 80/60 °C				
Natural gas	**kW**	**2.9 to 23.0**	**2.9 to 23.0**	**2.9 to 29.3**
LPG	**kW**	**2.9 to 23.0**	**2.9 to 23.0**	**2.9 to 29.3**
Standby instantaneous water heater				
DHW and cold water connections	G	½	½	½
Permiss. operating pressure (DHW side)	bar MPa	10 1	10 1	10 1
Minimum pressure, cold water connection	bar MPa	1.0 0.1	1.0 0.1	1.0 0.1
Outlet temperature, adjustable	°C	30 to 60	30 to 60	30 to 60
Continuous DHW output	kW	26.3	30.0	34.4
Spec. water flow rate (D) At ΔT = 30 K (to EN 13203-1)	l/min	13.26	15.59	17.04
Supply values Relative to the max. load and 1013 mbar/15 °C				
Natural gas E	m^3/h	2.89	3.35	3.69
Natural gas LL	m^3/h	3.36	3.90	4.29
LPG	kg/h	2.12	2.46	2.71
Flue gas parameters				
Temperature (at a return temperature of 30 °C)				
▪ At rated heating output	°C	41	46	59
▪ At partial load	°C	38	38	38
Temperature (at a return temperature of 60 °C, for DHW heating)	°C	65	67	72
Flue gas superheating temperature	°C	120	120	120
Mass flow rate (for DHW heating)				
Natural gas				
▪ At maximum heating output	kg/h	49.3	57.3	62.1
▪ At partial load	kg/h	5.6	5.6	5.6
LPG				
▪ At maximum heating output	kg/h	30.1	41	53.9
▪ At partial load	kg/h	3.9	3.9	3.9
Available draught	Pa	334	340	474
	mbar	3.34	3.40	4.74
Available draught For type B_{23P}	Pa	527	698	635

6167586

Specification (cont.)

Use with single connection

Gas boiler, type B and C, category II_{2N3P}				
Type		**B1KF-26**	**B1KF-30**	**B1KF-35**
Rated heating output range (details to EN 15502)				
T_F/T_R = 50/30 °C				
Natural gas	**kW**	**3.2 to 25.0**	**3.2 to 25.0**	**3.2 to 32.0**
LPG	**kW**	**3.2 to 25.0**	**3.2 to 25.0**	**3.2 to 32.0**
T_F/T_R = 80/60 °C				
Natural gas	**kW**	**2.9 to 23.0**	**2.9 to 23.0**	**2.9 to 29.3**
LPG	**kW**	**2.9 to 23.0**	**2.9 to 23.0**	**2.9 to 29.3**
Max. amount of condensate to DWA-A 251	l/h	3.7	4.3	4.9
Condensate connection (hose nozzle)	Ø mm	20 to 24	20 to 24	20 to 24
Flue gas connection	Ø mm	60	60	60
Ventilation air connection	Ø mm	100	100	100
Standard seasonal efficiency [to DIN] at				
T_F/T_R = 40/30 °C	%	Up to 98 (H_s) [gross cv]		
Energy efficiency class		A	A	A
Seasonal central heating energy efficiency	ηs (%)	93	94	94

Note
With appliances for use in multiple connection (vertical) and cascades (horizontal), the specification in the table above apply, with the exception of the following data – see table on appliances for multiple connection on page 120:

Appendix

6167586

Specification (cont.)

Use with multiple connection

Gas boiler, type B and C, category II_{2N3P}				
Type		**B1KF-26-M**	**B1KF-30-M**	**B1KF-35-M**
Rated heating output range (to EN 15502)				
T_F/T_R = 50/30 °C				
Natural gas	**kW**	**5.7 to 25.0**	**5.7 to 25.0**	**5.7 to 32.0**
T_F/T_R = 80/60 °C				
Natural gas	**kW**	**5.2 to 23.0**	**5.2 to 23.0**	**5.2 to 29.3**
Rated heating output for DHW heating				
Natural gas	kW	5.2 to 26	5.2 to 30	5.2 to 35
Rated heat input (Qn)				
Natural gas	kW	5.3 to 23.4	5.3 to 23.4	5.3 to 29.9
Rated heat input for DHW heating (Qnw)				
Natural gas	kW	5.3 to 26.5	5.3 to 30.6	5.3 to 35.3
Mass flow rate (for DHW heating)				
Natural gas				
▪ At maximum heating output	kg/h	49.3	57.3	62.1
▪ At partial load	kg/h	9.8	9.8	9.8
Available draught for type $C_{(10)}$ (at header system interface)	Pa	25	25	25
Maximum permissible pressure differential between flue gas outlet and air inlet for $C_{(10)}$ *4	Pa	–200	–200	–200

Note
The supply values are only for reference (e.g. in the gas contract application) or for a supplementary, rough estimate to check the volumetric settings. Due to factory settings, the gas pressure must not be altered from these values. Reference: 15 °C, 1013 mbar (101.3 kPa).

Flue system types

Available in the following countries	**Flue system types**
AE, AM, AT, AZ, BA, BG, BY, CH, CY, CZ, DK, EE, ES, FI, FR, GB, GR, HR, HU, IE, IS, IT, KG, KZ, LT, LV, MD, ME, MT, NL, NO, PL, PT, RO, RS, RU, SE, SK, TR, UA, UZ	B_{23}, B_{23P}, B_{33}, C_{13}, C_{33}, C_{53}, C_{63}, C_{83}, C_{83P}, C_{93} (C_{43}, C_{43P}, $C_{(10)3}$, $C_{(11)3}$, $C_{(13)3}$, $C_{(14)3}$ *5)
AU, BE, NZ	B_{23}, B_{23P}, B_{33}, C_{13}, C_{33}, C_{53}, C_{83}, C_{83P}, C_{93} (C_{43}, C_{43P}, $C_{(10)3}$, $C_{(11)3}$, $C_{(13)3}$, $C_{(14)3}$ *5)
DE, LU, SI	B_{23}, B_{23P}, B_{33}, C_{13X}, C_{33X}, C_{53X}, C_{63X}, C_{83X}, C_{93X} (C_{43}, C_{43P}, $C_{(10)3}$, $C_{(11)3}$, $C_{(13)3}$, $C_{(14)3}$ *5)
CN	C13

*4 *Appliances for multiple connection, type B1HF-M (for multiple connection)*
*5 *Only for specifically marked appliances.*

(cont.)

Gas categories

Available in the following countries	Gas categories
AE,AM, AT, DK, EE, KG, LV, LU, LT, RO, RU, SE AZ, BA, BG, BY, CH, CZ, ES, FI, GB, GR, HR, IE, IS, KZ, IT, MD, ME, NO, PT, RS, SI, SK, TR, UZ HU, MT, UA	II_{2N3P}/II_{2H3P}
BE	I_{2N}
DE, FR	II_{2N3P}
CY	I_{3P}
NL	II_{2EK3P}
PL	II_{2N3P}/II_{2ELw3P}
CN	12T
AU, NZ	NG/ULPG/I_{2H}

The gas condensing boiler is suitable for operation with a hydrogen blend of up to 20 % by vol.

Electronic combustion control unit

The electronic combustion controller utilises the physical correlation between the level of the ionisation current and the air ratio λ. The maximum ionisation current is achieved at an air ratio of 1 for all gas qualities. The ionisation signal is evaluated by the combustion controller. The air ratio is regulated to a value that is between λ= 1.2 and 1.5. This range provides for an optimum combustion quality. Thereafter, the electronic gas train regulates the required gas volume subject to the prevailing gas quality.
To check the combustion quality, the CO_2 content or the O_2 content of the flue gas is measured. The prevailing air ratio is determined using the actual values.

To achieve optimum combustion control, the system regularly carries out an automatic self-calibration; also after power failures (shutdown). For this, the combustion is briefly regulated to maximum ionisation current (corresponding to air ratio λ=1). Self-calibration takes place shortly after the burner starts. The process lasts approx. 20 s during which higher than normal CO emissions may occur briefly.

Final decommissioning and disposal

Viessmann products can be recycled. Components and substances from the system are not part of ordinary domestic waste.

For decommissioning, isolate the system from the power supply and allow components to cool down where appropriate.
All components must be disposed of correctly.

Ordering individual parts for accessories

Please affix accessory labels with part numbers here.
Please specify the relevant part no. when ordering individual parts.

Declaration of conformity

We, Viessmann Limited, Hortenwood 30, Telford TF1 7YP, United Kingdom, declare as authorised representative of the manufacturer and in sole responsibility for the manufacturer, that the named product complies with the applicable UK regulations in terms of its design and operational characteristics. Viessmann Limited, Hortenwood 30, Telford TF1 7YP, United Kingdom, hereby declares that the radio equipment type of the named product is in compliance with The Radio Equipment Regulations 2017.

Using the serial number, the full Declaration of Conformity can be found on the following website: **www.viessmann.co.uk/conformity**

Manufacturer's certificate according to the 1st BImSchV [Germany]

We, Viessmann Climate Solutions SE, D-35108 Allendorf, confirm that the product **Vitodens 100-W** complies with the NO_x limits specified by the 1st BImSchV, paragraph 6 [Germany].

Allendorf, 1 November 2021

Viessmann Climate Solutions SE

Authorised signatory Uwe Engel
Senior Vice President Engineering & Technology

Keyword index

A
Angle of penetration....29

B
Back draught safety device....48
Boiler water temperature sensor....93
Burner gasket....47
Burner gauze assembly....47
Burner installation....52
Burner removal....46
Burner reset....67

C
Combustion chamber cleaning....49
Combustion controller....121
Combustion quality, checking....55
Commissioning....36
Commissioning assistant....32
Condensate drain....50
Connection schemes....106
Control unit....106
Control unit functions....101
Converting the gas type....39
Cylinder temperature sensor....93

D
DHCP....28
DHW heating....105
DHW hygiene....57
DHW temperature, raised....57
Dynamic IP addressing....28

E
Electronic combustion controller....121
Expansion vessel....36, 54

F
Fault codes....68
Fault message, calling up....66
Fault messages....66
Faults....66
– Commissioning....42
Filling function....37, 101
Flow limiter....53
Flow pressure....41
Flow temperature sensor....93
Flue gas temperature sensor....94
Front panel removal....15
Function descriptions....101
Function sequence....42
Fuse....100

G
Gas solenoid valve....41
Gas supply pressure....41
Gas type....39
Gas type conversion....39

H
Heating curve....57, 101
Heating curve level....102
Heating curve slope....102
Heating output setting....43
Heating surface cleaning....49
Heating system, venting....38

I
Ignition....48
Ignition electrodes....48
Intended use....9
Internet, connecting....36
Ionisation electrode....48
IP addressing....28

L
Language selection....32
Leak test, balanced flue system....45

M
Mains isolator....39, 46, 54
Manufacturer's certificate....124
Message history....66
Multiple connection to shared flue system....45

O
Operating conditions, checking....65
Operating data, calling up....65
Operating data, checking....65
Operational reliability....28
Output adjustment with multiple connection....45
Outside temperature sensor....25, 93

P
Parameter
– Max. flow temperature, heating circuit....60
Parameters....58, 60
– Adjusting....58
– Calling up....58
– Energy saving functions, heating circuit....61, 62
– Max. Flow temperature, heating circuit....60, 61
– Max. speed, heating circuit pump....59
– Maximum heating output....60
– Minimum heating output....59
– Primary pump operating mode....58
– Room temperature hook-up, heating circuit....60
– Scald protection activation....59
– Screed drying....59
– Set flow temperature for external demand....58
Parameters for commissioning....57
Plate heat exchanger....97
Port 123....28
Port 443....28
Port 80....28
Port 8883....28

R
Range of WiFi connections....29
Reduced set room temperature....102

6167586

Keyword index (cont.)

Repairs....90
Report....110
Requirements....28

S
Screed drying....44, 103
Seal rings, replacing....37
Security parameters....28
Service menu....64
– Exiting....64
Set room temperature....102
Static pressure....41
Subscriber number of connected component....66
Subscriber numbers, extensions....62
Subscriber numbers, setting....62
Supply pressure....40, 41
Switch S1....62
Symbols....8
System configuration....32, 58
System filling....37
System pressure....37
System requirements....28
System schemes....57

T
Tightness test....37
Trap....20, 50
Type plate....9

V
Venting function....38
Venting program....101

W
WiFi connection....36
WiFi connection range....29
WiFi network....36
WiFi router....28
Wiring diagram....106

6167586

Viessmann Climate Solutions SE
35108 Allendorf / Germany
Telephone: +49 6452 70-0
Fax: +49 6452 70-2780
www.viessmann.com

Viessmann Limited
Hortonwood 30, Telford
Shropshire, TF1 7YP, GB
Telephone: +44 1952 675000
Fax: +44 1952 675040
E-mail: info-uk@viessmann.com

6167586 Subject to technical modifications.